Improving Infrasound Detection

Team 3 (iSound 2)

James Berger (913) 991 - 2909 James.w.berger@ucdenver.edu

Tyler Wyse (760) 505 - 6138 Tyler.Wyse@ucdenver.edu

Josh Wewerka (970) 430 - 1097 Joshua.wewerka@ucdenver.edu

Tiffany Graham (720) 207- 8325 Tiffany.graham@ucdenver.edu

Abstract

The purpose of this project was to create a wireless sensor array that could reliably locate infrasound sources. Infrasound is low frequency sound waves with frequencies below the lower limit of human audibility, 20 Hz. Infrasound sound waves are created from several natural phenomena such as earthquakes, avalanches, lightning, and volcanoes. They can also be created by man-made sources like machinery, wind turbines, missile launches, artillery, helicopters, and drones.

Focusing on the ability to locate, we wanted to provide a solution that was easy to manufacture, cost effective, easy to deploy, and provides real-time data. The design was planned to use an array of 7 different wireless sensor nodes in a circular array transmitting to a central receiver 'hub' node. Each node is comprised of a microcontroller, a microphone, and a wireless transceiver. Each module was tested individually to ensure it could detect sound. Two different microphones were tested with the module, a normal range(100Hz-15kHz) and a low frequency extended(6Hz-20kHz). The wireless module used for the final prototype was tested data transmission to 25 meters in a high loss, high interference environment. After further testing, the sensor array successfully detected sound with the low frequency extended range microphone and transmitted and displayed the sound data in real-time to the user.

CLO 1: Design Methodology

Most of the design methodology used to generate the design of our system was done in senior design 1. That is where we did ideation, functional decomposition, design requirements, the main part of our stakeholder interviews, and our initial prototyping. This semester we built on all of that and added the prototyping canvas shown below in figure 1. We worked through an iterative prototyping process toward a final product.

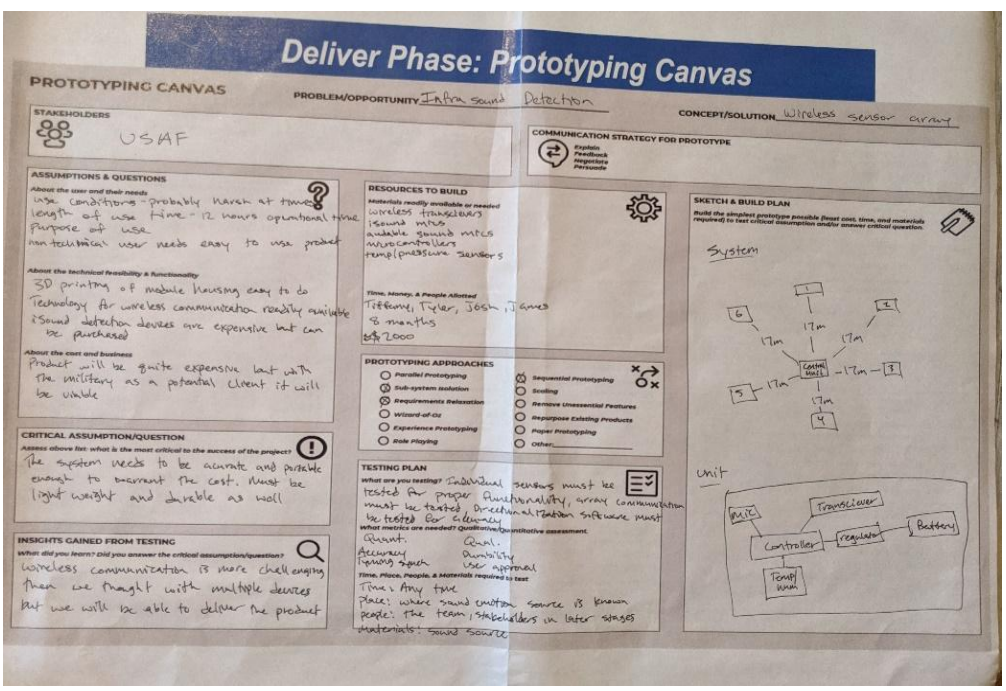

Figure 1: Prototyping Canvas

CLO 3: Engineering Documents

We did PowerPoint presentations for the class as well as two progress reports that included analysis of current prototyping efforts, a list of continuing milestones, a Gantt chart, BOMs, system block diagrams, and system wiring diagrams. Shown below in figure 2 the final project Gannt chart followed for the semester.

Figure 2: Gantt Chart

	Infrasound Team 2:	**Josh Wewerka, Tiffany Graham, Tyler Wyse, James Berger**			
	***Total Funds Available - Fall 2019:**	-$141		**Total Cost:**	$641
	***Total Funds Available - Spring 2020:**	$1,359		**Total Draw [A]:**	0.432751
Component ID	**Component Name**	**Description**	**Quantity**	**Cost per Unit**	**Total Cost**
001-001	ICS-40300	Microphone	6	$2	$12
001-002	Blue Pill	Microcontroller	3	$9.99	$29.97
001-003	Aidepeen ST-Link	Microcontroller Programmer	2	$8.60	$17.20
001-004	INMP401	Microphone Breakout Board	6	$10.95	$65.70
001-005	LM2596	DC Buck coverter pack of 6	1	$11.75	$11.75
001-006	B07G2JWYDW	Silicone Wire Kit- 22 Gauge	1	$13.99	$13.99
001-007	18650 Battery	DC Source for Each Module	7	$4.95	$34.65
001-008	BMP-280	BMP 280 with Breakout by Koobook	1	$6.99	$6.99
001-009	Battery Holder 18650	Battery Holder	7	$1	$7
001-010	Charging Protection	10pc 5V, 1A battery protection	1	$9.98	$9.98
001-011	Blue Pill	Microcontroller	1	$10	$10
001-012	NRF24L01	Wireless Transceiver	3	$13.99	$41.97
001-013	Elegoo EL-CP-004	Jumper Wires	1	$6.98	$6.98
001-014	18650 Battery	Batteries	2	$3.49	$6.98
001-015	Aidepeen ST-Link	Microcontroller Programmer	2	$8.60	$17.20
001-016	BMP-280	BMP 280 with Breakout by Koobook	1	$6.99	$6.99
001-017	ADMP401	Microphone Breakout Board	4	$7.99	$31.96
001-018	ELEGOO 3pcs MB-102	Breadboards	2	$8.99	$17.98
001-019	MEMS Microphone Breakout Board	PCB	2	$4	$8
001-020	No Clean SnPb	Leaded Solder Paste 15 Grams	1	$10.99	$10.99
	Order 4				$268.70

Figure 3: Bill of Materials

Figure 4 shows a system block diagram of a sensor network and single sensor below. A more detailed module wiring diagram can be seen in figure 5, and a microphone sensor diagram is shown in figure 6.

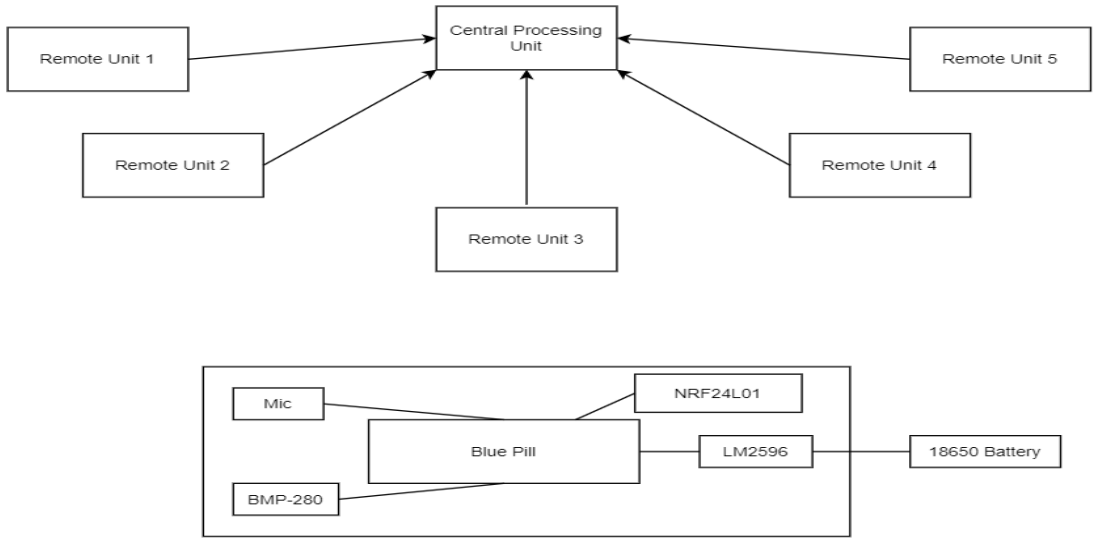

Figure 4: System Block Diagram

STM32_hub_node_V2.2 | Arduino 1.8.10

File Edit Sketch Tools Help

STM32_hub_node_V2.2 §

```
 *
 */

#include <SPI.h>
#include <nRF24L01.h>
#include <RF24.h>
//RF24 radio(9, 10); // CE, CSN
RF24 radio(PB0, PA4); // CE, CSN on Blue Pill
//const uint64_t address = 0xF0F0F0F0E1LL;
const uint64_t rAddress[] = {0x7878787878LL, 0xB3B4B5B6F1LL, 0xB3B4B5B6CDLL, 0xB3B4B5B6A3LL, 0xB3B4B5B60FLL, 0xB3B4B5B605LL };

int AUD;
int led_pin = PB6;  //set the led indicator to pin B6
int AUDpin = PA1;
byte nodeNum = 0;
int nodeData[6] = {0}; // define data storage

void setup()
{
  pinMode(led_pin, OUTPUT);
  Serial1.begin(1000000);                    // Run a faster baud rate
  radio.begin();
  radio.setChannel(1);
  // default channel for the RF24 library is 76
  radio.setPALevel(RF24_PA_MAX);           // If you want to save power use "RF24_PA_MIN" but that reduces the module's range
  radio.setDataRate(RF24_1MBPS);
  //radio.setAutoAck(1);                     // Ensure autoACK is enabled
  //radio.setRetries(2,15);                  // Optionally, increase the delay between retries & # of retries

  //radio.setCRCLength(RF24_CRC_8);          // Use 8-bit CRC for performance
  Serial1.println("===========Hub Node===========");
  // open all 6 reading pipelines
  radio.openReadingPipe(0,rAddress[0]);
  radio.openReadingPipe(1,rAddress[1]);
  radio.openReadingPipe(2,rAddress[2]);
  radio.openReadingPipe(3,rAddress[3]);
  radio.openReadingPipe(4,rAddress[4]);
  radio.openReadingPipe(5,rAddress[5]);
  radio.startListening();                 //This sets the module as receiver
  //radio.printDetails();                   // Dump the configuration of the rf unit for debugging

  delay(500);                            //wait for tx nodes to start

}

void loop()
{
```

Figure 4.1: Sample screenshot of program code used on the 'Hub Node'

livePlot_V2.2videoTest.py - Visual Studio Code

livePlot_V2.2videoTest.py

D: > Documents > A_school_stuff > ELEC_4309_senior_design_II > Prototyping > V2.2 > livePlot_V2.2videoTest.py > ...

```python
import numpy as np
from time import sleep
from matplotlib import pyplot as plt
from matplotlib import animation

def handler(signal, frame):
    global keepRunning
    global ready

    print('SIGINT or CTRL+C detected, setting keepRunning to False')
    keepRunning = False
    ready = True
    ser.close()

def serialConnect(portName, baudRate):
    try:
        ser = serial.Serial(portName, baudRate)
        print("opened port " + ser.name + '\n')
        # give Arduino time to reset
        sleep(2)
        # flush input buffer, discarding all contents
        ser.reset_input_buffer()
        return ser
    except serial.SerialException:
        raise IOError("problem connecting to " + portName)


def init():
    graph0.set_data([], [])

    graph4.set_data([], [])
    graph5.set_data([], [])
    return graph0, graph4, graph5

def animate(i):
    global t, node0, node4, node5

    while (ser.inWaiting() == 0):
        pass

    bytesRead = ser.read_until()
    dataArray = [int(v) for v in bytesRead.decode().split(':')]
    print(dataArray)

    node0.append((dataArray[0]))
    # node1.append((dataArray[1]))
    # node2.append((dataArray[2]))
    # node3.append((dataArray[3]))
    node4.append((dataArray[4]))
```

Python 3.8.2 32-bit ⊗ 0 ⚠ 0 Ln 1, Col 1 Spaces: 4 UTF-8 CRLF Python

Figure 4.2: Sample screenshot of python code used for live plotting

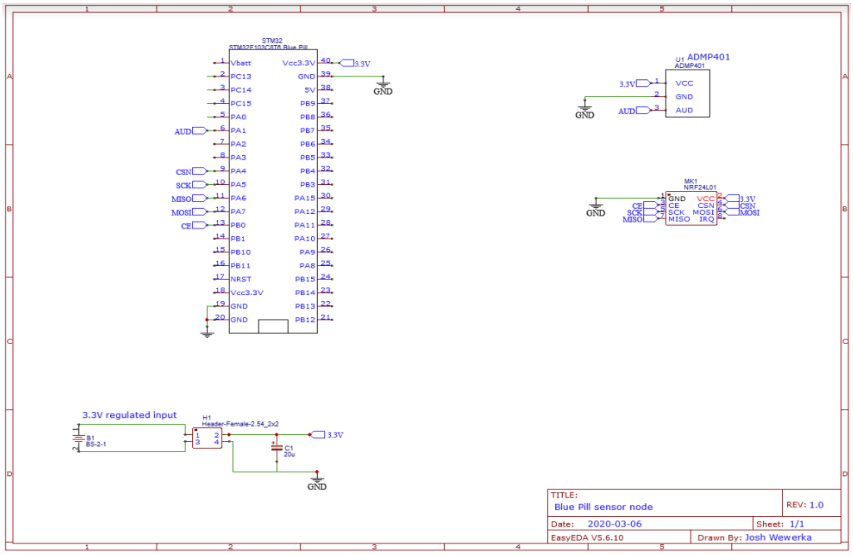

Figure 5: Sensor Node Wiring Schematic

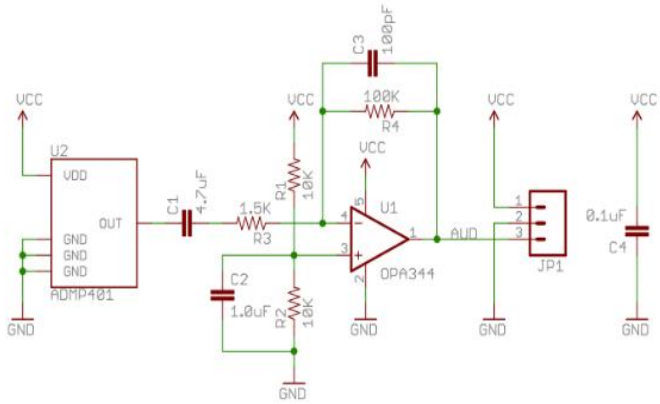

Figure 6: Breakout Board Design (for iSound Sensor Mounting)

CLO 4: Design tools

The design tools using during the building of a wireless sensor array are as follows:

- Microsoft word – used for design reports and all text editing.
- Microsoft excel – used for tracking bill of materials and progress tracking with the Gannt chart.
- Power Point – used for building both live presentation slides and video presentation slides.
- diagrams.net – used for creating program flow diagrams and high-level block charts (see figures 4 and 8)
- EasyEDA – used for designing all wiring diagrams (see figures 5, 6, and 7).
- Arduino IDE – used for writing the C++ software that runs on the sensor nodes see figure 4.1).
- Python – used for building live plotting capabilities and GUI (see figure 4.2, 10, and 11).

CLO 6: Patent Research

Items that fall under this ELO 6 include the patent search and component selection. The patent search results are shown below. For the component selection process, we had to go over our functional requirements list and design specifications (power use, current draw, etc.) and then select components that will meet those requirements.

- Patent number: 10,392,125
    - System and method for onboard wake and clear air turbulence avoidance
    - Dr. Qamar Shams
- Patent Number: 10,051,599
    - William Mathew, Vahid Dehghanian
    - Range finding and object positioning systems and methods using same
- Patent Number: 10,045,525
    - Husseiney et al.
    - Active non-lethal avian denial infrasound systems and methods of avian denial
- Patent Number: 6,570,500
    - Norbert Pieper
    - Infrasound surveillance system
- Patent Number: 10261163B1
    - John P. McIntire
    - Low frequency sound sensor array for positioning and methods

Of the patents discovered only that by McIntire and William are similar to the system designed here. McIntire's system is similar because he is the Air force contact that provided the project of improving infrasound detection.

CLO 8: Proof of Concept

The purpose of this design is to show that a low frequency wireless sensor array is functional. The design was planned to use an array of 7 different wireless sensor nodes in a circular array transmitting to a central receiver 'hub' node. Due to the COVID-19 pandemic all 7 functional nodes were not possible to test completely together.

The basis of each sensor node is an STM32 based microcontroller, a microphone, and a wireless transceiver, as shown again in figure 7.

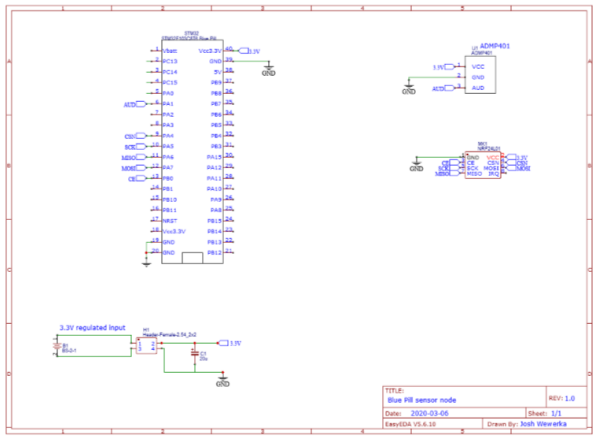

Figure 7: Single sensor node schematic

As sound data is read from the sound sensor, the microcontroller transmits the data via the 2.4GHz transceiver to the central node. The schematic for our wireless network is shown in figure 8.

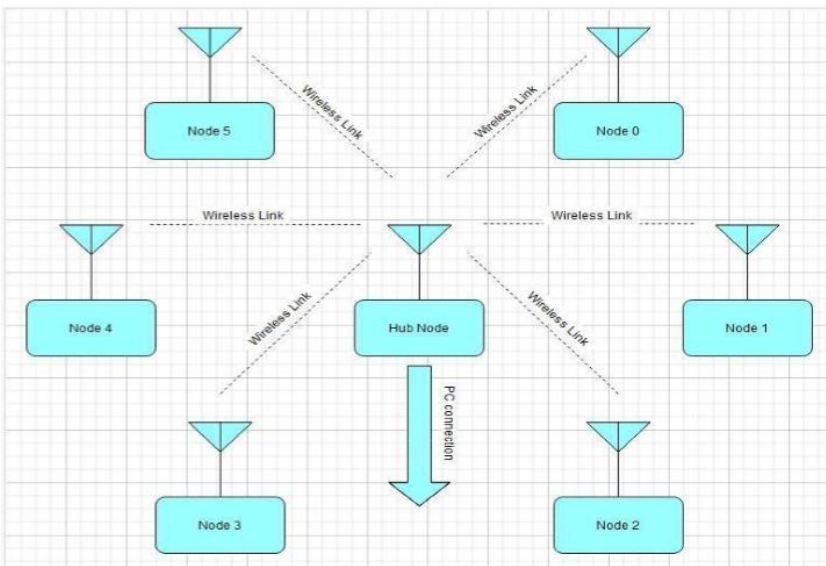

Figure 8: Sensor node network diagram

The wireless module used for the final prototype was tested to 25 meters in a high loss high interference area. At 20 °C, the speed of sound is 343 meters/second. A sound wave at 20 Hz will have a wavelength of 17 meters. In theory this would allow multiple data points per wavelength at the tested range. We used two types of microphones for testing. A normal range microphone (100Hz-15kHz) and low frequency extended microphone (6Hz - 20kHz). The normal range microphone was used because we were able to order the breakout board with all the necessary components included. The only option for the extended frequency microphone was to buy the chip (QFN package) and modify the normal frequency breakout board (desolder the old microphone and solder the new microphone). The low frequency microphone can be seen in node 5 of figure 9 compared to the normal range microphone in node 4 of figure 3.

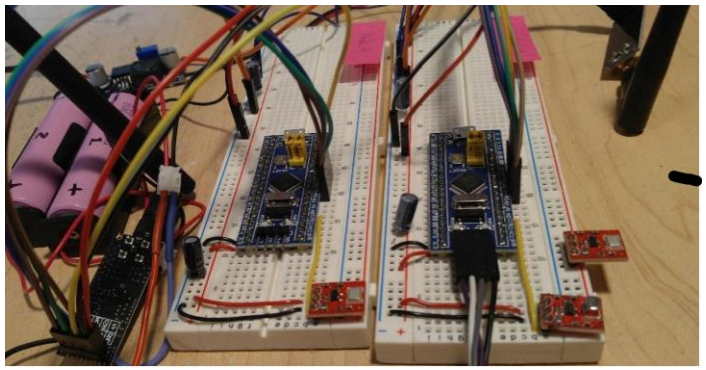

Figure 9: Typical Modules (Left module is node 4 and the right module is node 5)

From the results shown in figure 10, the low frequency extended microphone picks up sound and vibrations that are not detected by the normal range microphone. The data shown in figure 4 also shows the modules successfully transmitting sound data real time and plotting the results to the user. The first three nodes are not operating due to social distancing restrictions as part of the COVID19 restrictions. Had the sensors been available, the prototyped code would support all 7 nodes.

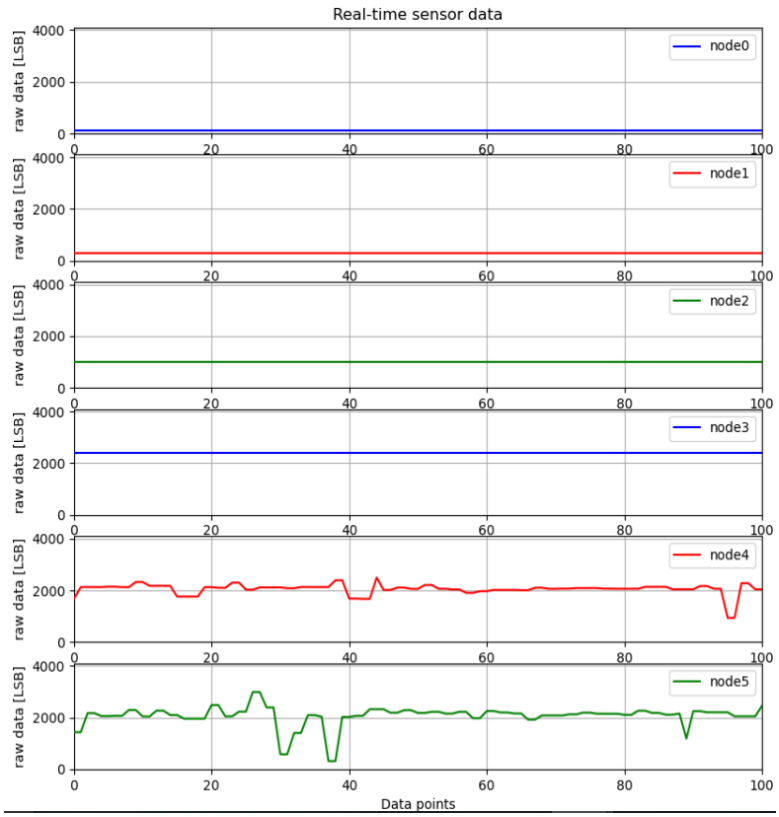

Figure 10: Live data plotting (2 operating sensors)

Lastly, we created a user interface to control modules. The UI's function would be to start and stop the operation of the nodes and to display the data to the user. The data shown in figure 11 is mock data to show the function of the UI but collecting sound data through the UI has not yet been implemented (again due to COVID19 related issues). On modified modules (that do not have sound sensors), the UI

can request, receive, and display environmental data (temperature, pressure, and humidity). Since the data being received is done with the same transceivers, converting the code to receive sound data would be a simple task.

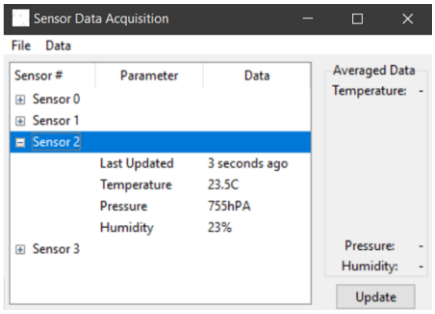

Figure 11: User Interface

List of Design and Implementation Tasks and Responsibilities

- Our team was all EE's, but we had different areas of specialization
  - Tyler – Power/computer engineering
  - Josh – RF/embedded systems
  - Tiffany – RF
  - James – Power

Final Remarks Recognize the need for and an ability to engage in life-long learning.

This is a project that was given to us by the air force that has been worked on for years by many people. Our objective was to find a way to improve the current design prototypes. Dr. Shaums, one of our sources of information and guidance on the project, has spent most, if not all, of his career working on this problem in a variety of applications. The assignments and status reports gave us the opportunity to learn about professionalism, professional ethics, and responsibility. This project pushed out team to overcome many obstacles as engineers.

Appendix Marketing Brochure & Resumes

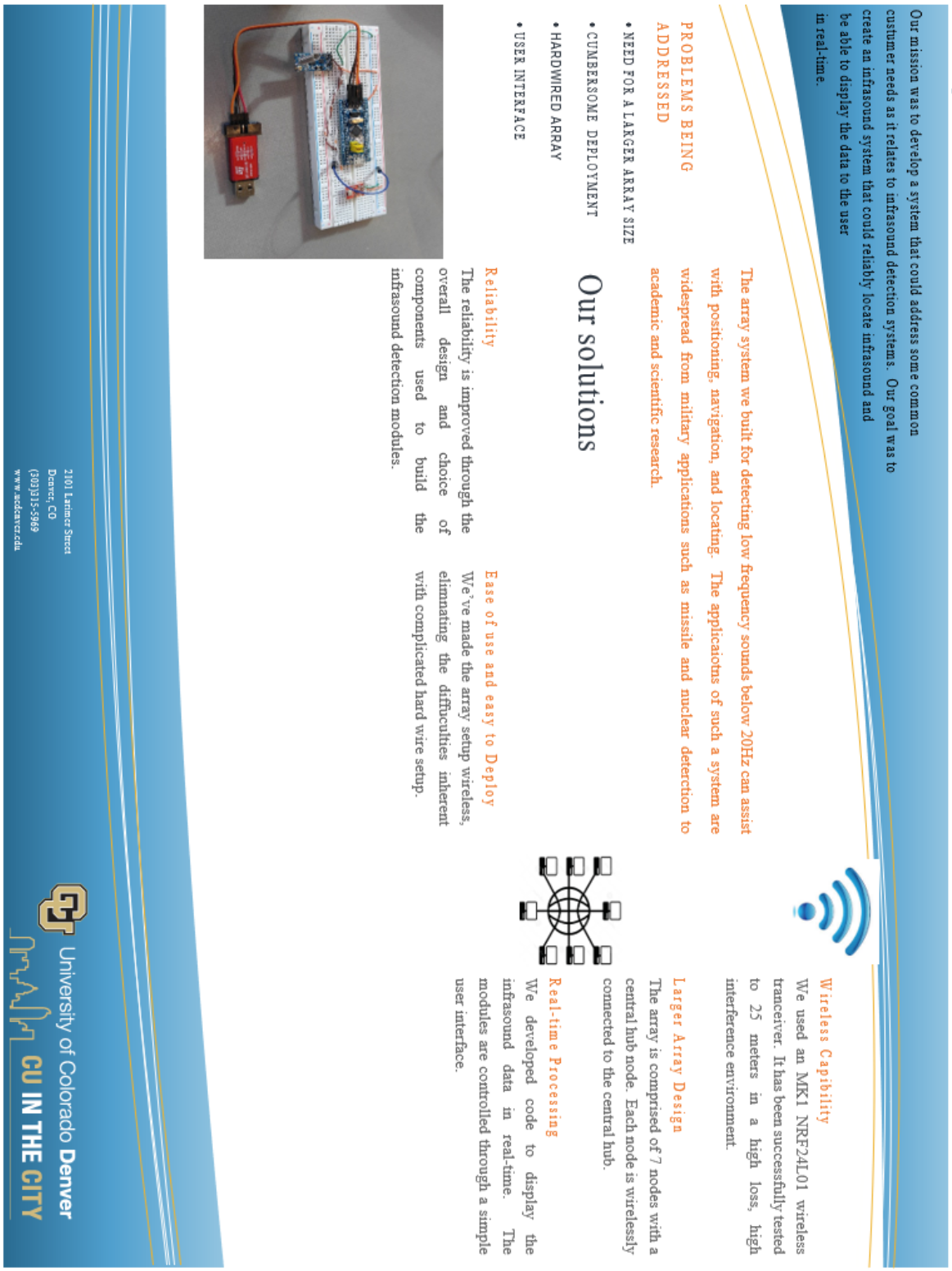

Infrasound

Infrasound is low frequency sound waves with frequencies below the lower limit of human audibility, 20 Hz. Infrasound sound waves are created from several natural phenomena such as earthquakes, avalanches, lightning, and volcanoes. They can also be created by man-made sources like machinery, wind turbines, missile launches, artillery, helicopters, and drones.

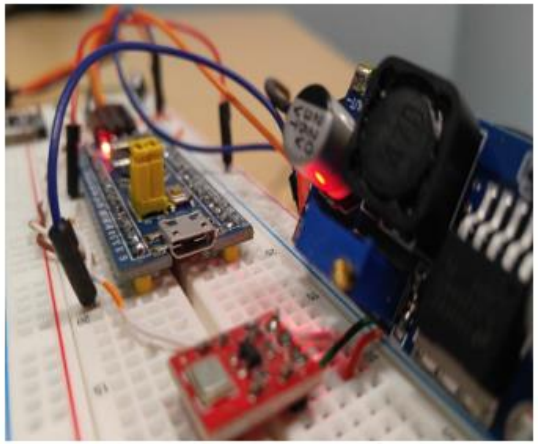

There are few reliable infrasound detection systems on the market today.

We have creatd a wireless sensor array that could reliably locate infrasound sources. Along with the ability to locate, we wanted to provide a solution that was easy to manufacture, cost effective, easy to deploy, and provides real-time data to the user. The design plan was to use an array of 7 different wireless sensor nodes in a circular array, transmitting to a central receiver 'hub' node. Each node is comprised of a microcontroller, a microphone, and a wireless transceiver.

University of Colorado **Denver**

CU IN THE CITY

2101 Larimer Street
Denver, CO
(303)315-5969
www.ucdenver.edu

Josh Wewerka

970-430-1097 | jwewerka@gmail.com

Education

University of Colorado Denver, Spring 2020
B.S. Electrical Engineering GPA: 3.25
M.S. Electrical Engineering Fall 2021

FRCC, ACC, Automotive Technical Training 2012-2013

Projects

SEDS Rocketry Competition 2018

- Designed rocket separation and recovery avionics with multidisciplinary team
- Documented design and testing procedures
- Performed failure analysis and redesign
- Finished 2nd place nationally
- Stayed on schedule despite last minute redesigns and failures

Rocket Lynx 2018-2019

- Lead designer of avionics and wireless engine test systems
- Built control system for operation by non-electrical engineers
- Created design reports and minimum cost BOM
- Learned about risk reduction and design management

Infrasonic Sensor Array 2019 - 2020

- Design of RF Sensor Array for directional low frequency sound detection
- Performed design with team of electrical engineering students
- Working on improving sensor fusion and RF data timing

Technical Skills

- C, MATLAB, Python programming
- Verilog HDL and FPGA programming
- Arm & Arduino embedded design
- OrCAD PSpice design and simulation
- VNA & Spectrum Analyzer testing
- Fusion 360 modeling
- 3D printing and rapid prototyping
- UAV design

Professional Skills

- Client management
- Engineering consulting
- Automotive diagnostics and repair
- Engine control system programming
- MIG-welding and fabrication
- Appliance diagnostics and repair

Experience

University of Colorado Denver
Research Assistant - Electrical Engineering 2019 - Present

- Conduct VLF experiments with Electromagnetics and Plasmas Group
- Maintain magnetic antenna station and managed data uploads
- Build VLF test equipment

Zayo Group
Network Engineering Intern Summer - 2019

- Worked with Private network ISP team with all aspects of new builds
- Performed Loss of Visibility check for internal Telemetry systems
- Created and automated new build site audit to ensure validity of all plant information

Dynamic Wrench Solutions Ltd.
Owner/Operator 2017 - Present

- Service and consulting-based business Managed all business operations.
- Specialty automotive (ASE certified), Engineering Consulting
- Electrical system design and diagnostics.

Lyft
Dynamic Wrench Solutions - Contact Mechanic 2017 - Present

- Inspect all vehicles on Lyft platform for Colorado TNC legal guidelines
- Provided on site vehicle repairs and educate drivers on proper vehicle maintenance

Reliable Appliance Repair
Contact Technician 2016 - 2018

- Managed Clients and vendors, performed service calls across Denver greater area
- Diagnosed and performed full repairs for warranty claims
- Built estimates and sold repair services for non-warranty customers

James W. Berger

1864 Pennsylvania St Apt 3532, Denver, CO
Phone: 913-991-2909
james.berger88@gmail.com

Summary:

Uses & applies technical standards, principles, theories, concepts, & techniques to perform activities/assignments that may include a variety of complex features. Works under the general direction of a higher-level engineer or supervisor for routine engineering projects. Works remotely with field crews to ensure proper instillation and testing of relay equipment. Supports the development of technical documentation (including but not limited to designs, calculations, reports, standards, etc.).

Education:

University of Colorado Denver:

- August 2017 – Present
- B.S. in Electrical Engineering with Computer Engineering Minor
- Expected graduation: May 2020
- GPA 3.625
- IEEE HKN Honors Society
- Dean's list spring/fall 2018 and spring 2019

Technology Skills:

- Python
- MATLAB/Simulink
- PSpice
- SQL
- Quartus
- Microsoft Office
- CAPE
- C
- Verilog
- ProjectWise
- SharePoint
- SEL Software

Work Experience:

Xcel Energy, Denver, CO: *System Protection Engineer Intern* 05/2018 – Present

- Independent peer-review of models and calculations for transmission line relay settings
- Peer-reviewed a project where several errors in the consultant's deliverable were identified, and worked with internal and external partners to fix them
- Research of applicable internal processes and PRC regulatory compliance specifications necessary for the completion of projects
- Automation of database tasks using SQL and Python
- Creation and maintenance of models for all transmission line and substation equipment

24 Carrots Catering and Events, Costa Mesa, CA: *Service Manager* 2012 – 2017

- Responsible for management of crews of up to 30 people
- Responsible for staff training and development
- Primary interface between staff and clients on job sites
- Worked full time while going to college

James W. Berger

1864 Pennsylvania St Apt 3532, Denver, CO
Phone: 913-991-2909
james.berger88@gmail.com

College Engineering Projects:

Senior Design Project (in progress)

- Team lead for a group working on development of a low frequency sound detection system, current plan is to replace heavy analog components with robust wireless sensor array.
- Responsibilities include managing budget and deliverables, keeping up to speed with research, and being the primary point of contact with the outside stakeholders

Arduino Sonar Project:

- Used Arduino for live mapping of data acquitted from a servo mounted sonar sensor.

Tyler Wyse

9024 Cody Circle
Broomfield, CO 80021

Email : tylerwysemail@gmail.com
Contact : (760)505-6138

Education

- **University of Colorado Denver** — Denver, CO
  Expected graduation: May 2020; BSEE with Computer Engineering minor; Current GPA: 3.97 — *Fall 2017 – Present*
- **Front Range Community College** — Westminster, CO
  Associates in General Studies; GPA: 3.33 — *Spring 2019*
- **Passed Fundamentals of Engineering Exam (EIT)**
  FE Electrical and Computer

Relevant Coursework

- **Power Electronics + Power Electronics Laboratory**
  Fall 2019
- **Control Systems Analysis + Control Systems Laboratory**
  Fall 2019
- **Power Systems Analysis**
  Spring 2019
- **Advanced Power Electronics**
  Future - Spring 2020 - Graduate level course
- **Control and Estimation of Batteries and Supercapacitors**
  Future - Spring 2020 - Graduate level course

Experience

- **Xcel Energy** — Denver, CO
  Substation Communication Engineering Intern — *Sept. 2018 - Present*
  - **Engineering Access to Remote Devices:**: Verified existence and connectivity to intelligent electronic devices located at several substations across Colorado.
  - **Identified Coding Opportunities**: Leveraged Python to complete tasks that would have otherwise been time consuming, such as gathering instantaneous transmission line data from multiple devices.
  - **Reliable data tracking**: Verified and completed lists containing important information on various devices (Ethernet Switches, RTU's, HMI's).
- **TSYS** — Broomfield, CO
  Senior CSR — *May 2015 - Sept. 2018*
  - **Technical Support**: Maintained client relationships by assisting in support requests. Regularly found solutions to unique and complex problems by adapting to the needs of the customer and identifying the root cause of the current problem.
  - **Internal Job Support**: Created a practical application with VBA to assist in job tasks (automating manual processes, quick access templates, logging)

Technology Skills

- **Languages**: Competent in C, Python, and VBA. Basic understanding in Matlab/Simulink and Verilog
- **Software**: Microsoft Office, Sharepoint, Visio, Quartus, PSpice, PuTTY/plink, ProjectWise, ESNet (Subnet Solutions)

Projects

- **Infrasound Sensing (Capstone Project - in progress)**: The goal of this project is to capture and process low frequency sound to find the originating source. For the first part of this project, I have designed, built, and demonstrated a prototype for the Air Force Research Laboratory (main stakeholder). Based on stakeholder feedback, the main design objectives include an expandable sensor array, wireless sensors, and an intuitive interface.

Tiffany Graham

25240 E Arbor Pl
Aurora, CO 80016
tiffany.graham78@gmail.com
720-207-8325

PROFESSIONAL SUMMARY

Accomplished engineer in project management, electrical and systems engineering and testing; experience integrating and maintaining complex systems involving both hardware and software. Proficient in project management, business analysis, planning, developing, implementing, and maintaining programs, policies, and procedures. Possess excellent organizational, analytical and research capabilities as well as strong communications skills.

QUALIFICATIONS

Certified 6Sigma Specialist
SDLC, end-to-end testing, agile development, development/ requirements for SOA
Project Management, operations analysis, requirements analysis
C/C++ programming, embedded systems, VHDL, UNIX, MATLAB, XML
FPGAs, various engineering modeling and simulation software
Experience with windows servers, SharePoint
STK and various Command and Control systems/subsystems
Digital signal processing, proficient in the use of digital multi-meters, oscilloscopes, frequency counters, spectrum analyzers, and waveform generators
MS Project, SharePoint, Excel, Word, PowerPoint, Access
Familiarity with ArcGIS
MEP coordination
Data Center life cycle support and testing

EXPERIENCE

Electrical Commissioning Engineer/Project Manager Primary Integration 2015-2019

Provides engineering and technical support to plan, schedule, coordinate and execute full life cycle commissioning of critical facilities to include data centers, utility companies, and major mobile providers
Responsible for cross-functional requirements and submittal review, translating findings into SOW, scope, schedule, and actionable test plans
Lead daily status meetings with focus on schedule, manning, milestones, and issue tracking and resolution
Responsible for preparing and managing project plans and effective reporting of project status
Participates in the design process, developing test procedures and operating procedures;

Performs/witnesses the static and dynamic testing of complex mechanical, electrical and controls systems
Performs testing on MV and LV switchgear, distribution systems, transformers, generators, UPS, PDU, ATS
Daily use of onelines and drawings
Leads and participates in planning, executing and reporting results of Design and Product Validation testing
Participates in factory witness testing
Conducts site observation surveys and prepares reports on the status of projects and completion of projects with respect to compliance to the plans and specifications, prepares general condition survey reports
Interacts with clients and contractors, interprets design and specifications

Project Manager/Systems Engineer, Raytheon Company 2012-2015

Selected to perform project management duties for the DoD to include planning, execution, and finalizing projects according to strict deadlines, acquired resources and coordinated efforts of team members and third parties to deliver projects according to schedule and plan
Defined projects' objectives defined system requirements and oversaw quality control throughout development life cycle in various enterprise environments to include service oriented architecture (SOA)
Assisted the customer with scoping phases of projects and formulation and implementation of project strategies to ensure the alignment with organization strategies
Managed the scope, resources, and schedules of operational needs and requirements
Developed and implemented operational readiness plans and exit criteria for project teams, built milestones into plans, monitored progress and adjusted them as necessary
Created more than 60 test plans, scenarios, use cases, and user stories for multiple simultaneous projects
Conducted tests, verification and validation, documented the outcome of test executions and necessary information, determined risks, defects, and mitigation strategies and solutions
Participated in the development of policies, processes and procedures, and managed the implementation to ensure all relevant procedural requirements are fulfilled
Provided support to critical design reviews, scrum teams, performance assessments, and IPTs
Facilitated team and customer meetings; held regular status meetings with enterprise level project teams
Maintained awareness of new and emerging technical efforts and the potential application to organization

Operations Technical Lead, Raytheon Company 2010-2012

Competitively promoted to manage 24x7 satellite operations mission including 80 personnel responsible for executing tasking; processing, data characterization, and reporting of info derived from real time processing systems
Responsible for monitoring organizational budgets, hiring, promotions, and career development for approximately 80 personnel
Successfully established training plan of action and personnel readiness for new operations asset
Successfully worked with +13 government agencies in over 20 acquisition and integration efforts, which includes participation in Working Groups, Research and Development Technical Forums, Integrated Product Teams, Design Reviews, Readiness Demonstrations, and User Engagements
Defined system requirements/enhancements, ensured that integration efforts were executed within established integration processes
Ensured the timeliness and accuracy of time-dominant reports
Guaranteed operational support produced near real-time effects and led to operational success
Compared data sets to metrics from empirical data in order to derive a better understanding of phenomenology and improve current system capabilities
Supported future concept exploration of data analysis, algorithm development, and human-machine interfaces
Developed Operational Readiness Demonstration Plans and procedures for integration of new operations assets

Operations Subject Matter Expert and Operations Support Analyst, Raytheon Company 2010-2012

Operated 6 research and development systems requiring knowledge of the software applications and data processing aspects of the systems while maintaining real time technical problem solving skills
Advised and assisted in effective design changes to improve operational efficiency by 33% thereby reducing cost of operations
Operated and tested specialized systems in support of multiple R&D laboratory activities
Performed spectrum and temporal analysis
Utilized technical training and equivalent technical experience to evaluate system performance and enhance system operation and data processing capabilities
Provided real-time operational response to system alerts and changes in the system environment including system reconfiguration, data analysis, and data reporting
Developed and maintained +200 technical standards and procedures as well as training and evaluation material for 7 operations positions
Projected and monitored fiscal year training budgets
Tracked and provided continuous personnel development based on job requirements and individual competencies to achieve career progression goals
Tested and trained +70 personnel on new software and hardware upgrades and patches for all operations positions
Integrated new system into the existing site infrastructure
Liaison for operations, management personnel, and customer

EDUCATION

BS Electrical Engineering University of Colorado at Denver Present