University of Colorado Denver

Project Title:

Scooter Safety

Team Members:

Noah Johnson (Captain)

720-261-7518/noah.m.johnson@outlook.com

Erick Chavez-Estrada

720-495-5525/erickchavez77@gmail.com

Alan Prieto

303-264-7866/alan.o.prieto@gmail.com

Brandon Thao

720-400-1346/brandon.s.thao@gmail.com

Javis Quach

720-757-8420/javisquach@gmail.com

B. Description of the project

As the world grows and cities become more crowded, we develop new ways of transportation. In the last few years, we have seen an increase of electric scooters around downtown Denver and its surrounding areas, which makes transportation much faster during any time of day. Unfortunately, the companies who manage the scooter rentals do not have many safety measurements in place that insure a safe ride. This is where we as students at the University of Colorado at Denver and future engineers come in. We have developed a safety system that will prevent riders from crashing into anything in front of them as well as always knowing if something is behind them. Our motivation behind this project comes from the unfortunate event that took Cameron Hagan's life after a collision with a car.

The safety system that we have developed consists of several distance sensors that communicate to other sensors/motors to accomplish our goals. In order to run all the components used in our system we came up with the C code that can be programmed to an Arduino microcontroller. We began by making multiple code files, making sure that each element worked alongside the Arduino individually and later created a single code file where everything was put together. We have a Lidar sensor, which goes on the front of the scooter, which communicates to a relay and a servo motor to stop the scooter. Then we have two ultrasonic sensors placed on the back of the scooter, one facing in the left direction and the other to the right. They communicate to vibration motors placed inside on the left and right handlebars. The vibration motors will begin to vibrate if its corresponding ultrasonic sensor detects something behind the rider, this will let the rider know whether there is something behind him/her and what side they object is approaching from.

In order to power our system, we decided to invest in a power converter and use the power that is provided from the scooter's batteries. The converter will reduce the 25 volts needed to power the scooter to 5 volts which is what our microcontroller requires. We were able to determine how to power the microcontroller alongside the scooter by using jumper cables to connect the ON switch of the scooter to the converter. Also, to keep the converter from burning our microcontroller we decided to connect the two by using the pins on the Arduino instead of using the USB port found on the microcontroller.

C. Design methodology (CLO 1)

Our approach was to design with all the stakeholders, so we talked to all the stakeholders from the customers to the police chief. Then we came up with a design for our prototype. Once we had the ideas that we wanted to prototype, we needed a plan to get started and by figuring out our design requirements, we had a good starting point. Design requirements are a set of measurable engineering specifications that a design must meet. These are quantities that must be met or not. A good way to get an idea of how we want the prototype to perform is by assigning measurable values so that we can have goals to meet. After going through this process, we put all that information into table 1, and even though we did not plan on making a prototype for the tilt control, we still included it. Next, we created a small-scale proof of concept design so that we could test basic functionality. Finally, we moved on to implementing all the pieces together.

Design Requirements	Performance or Failure	Threshold	Objective	Analysis or Simulation or Prototype	Notes
Detect behind the Rider	Performance	2 Meters	5 Meters	Proto Testing	Detect Distance
Brake Assistance	Performance	2 Meters	4 Meters	Proto Testing	Help User Brake
Vibrating Bars	Performance	N/A	User Feels the Vibration	Proto Testing	Make sure vibration is felt through bars
Tilt Control	Performance	20 Degrees	25-30 Degrees	Proto Testing	Alter User

Table 1 Design Requirements

D. Engineering Documents (CLO 3)

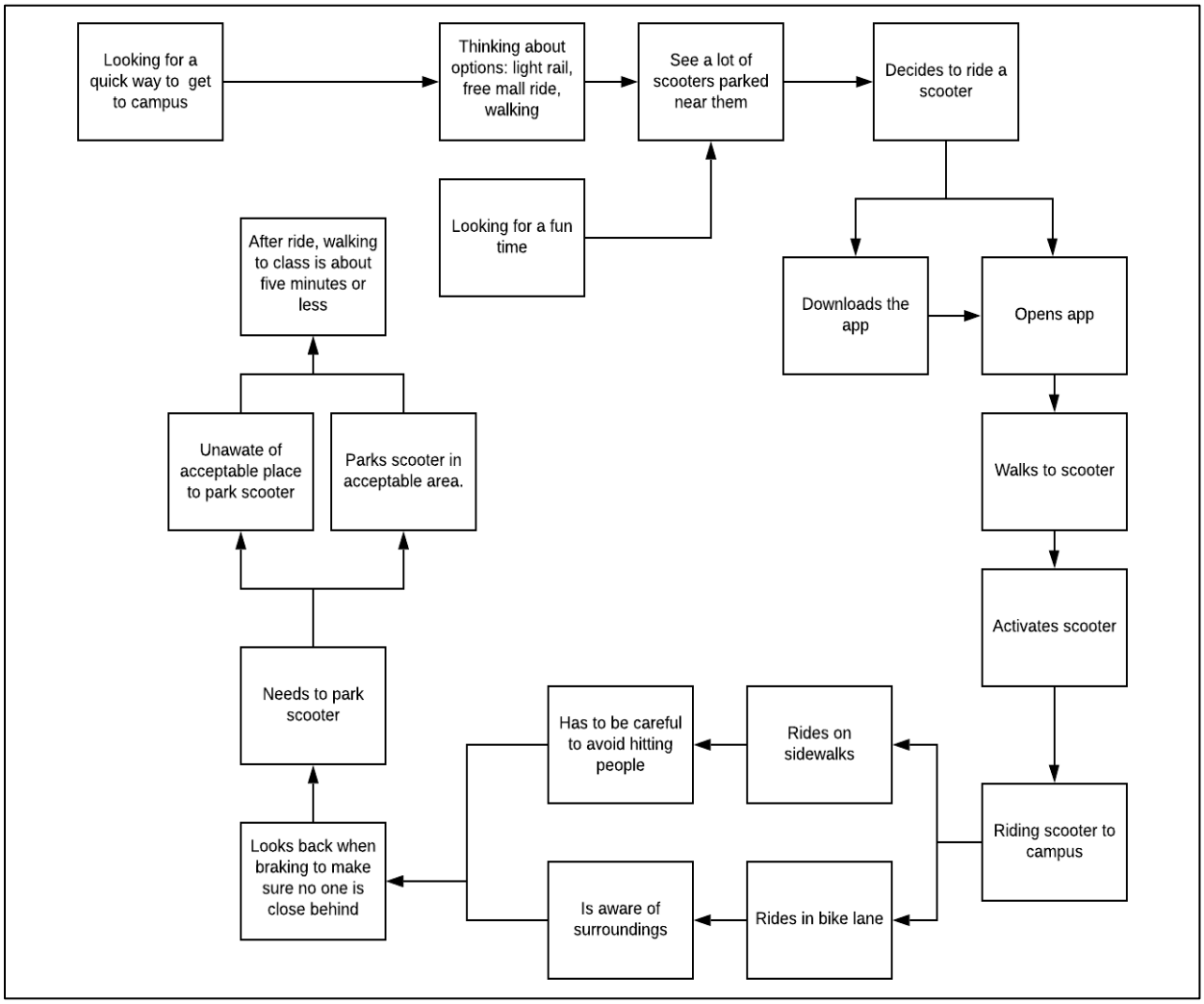

Figure 1 Journey Map

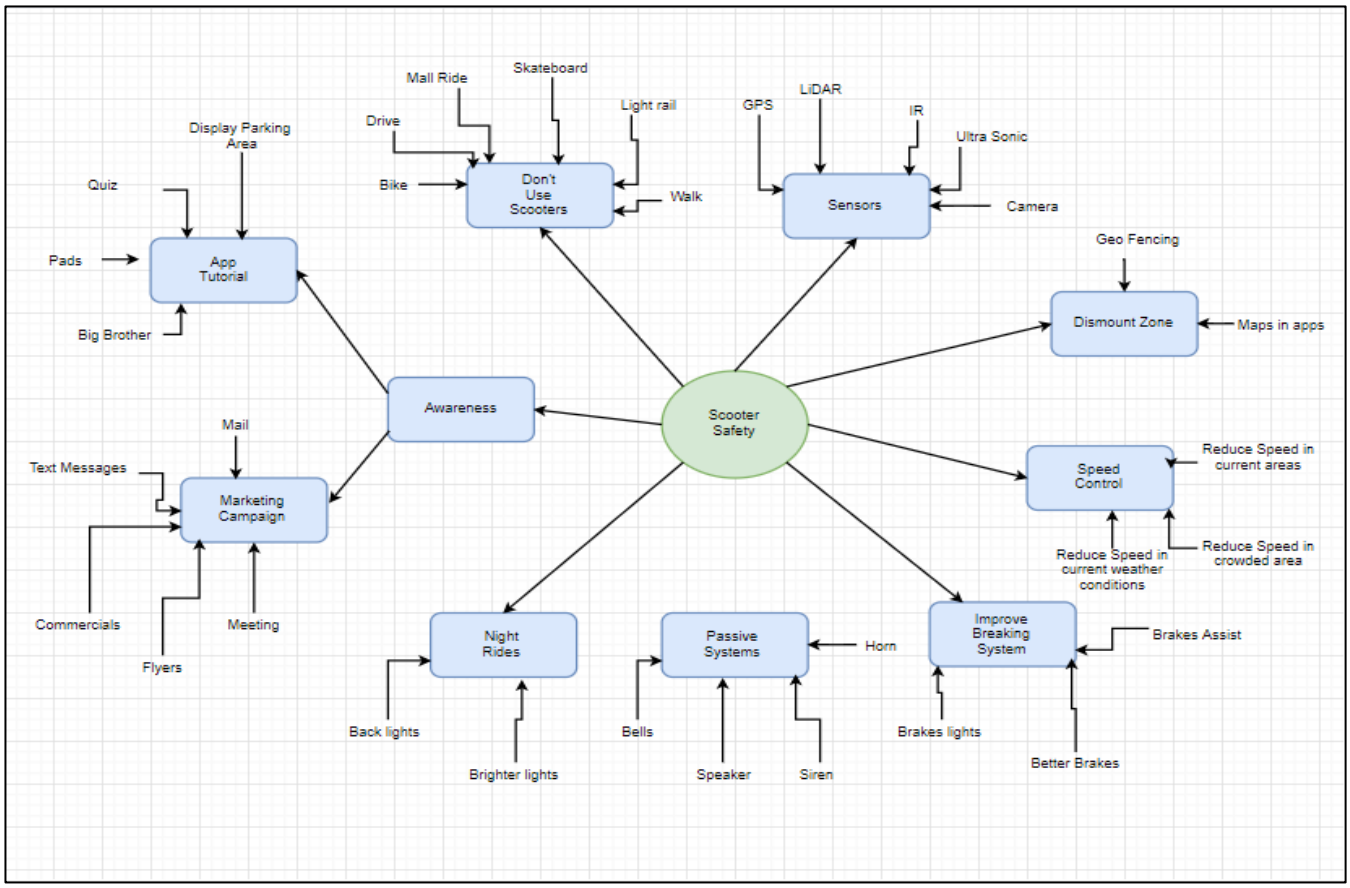

Figure 2 Mind Map

```
#include <SoftwareSerial.h>
#include "TFMini.h"
SoftwareSerial mySerialone(2, 3); // Uno RX (TFMINI TX), Uno TX (TFMIN
TFMini tfmini;
int pos = 0;
#define LEDR 13
#define VibR 12
#define LEDL 11
#define VibL 10
#define piezoPin 9
#define servoPin 8
#define triggerPinR  7
#define echoPinR     6
#define triggerPinL  5
#define echoPinL     4

#define relay1 31

#define SONAR_NUM     2 // Number or sensors.
#define MAX_DISTANCE 200 // Max distance in cm.
#define PING_INTERVAL 33 // Milliseconds between pings.

//uint16_t dist1=300;     //////...........Debug lag
static unsigned int rawDistanceCMR;
static unsigned int rawDistanceCML;
bool rightLeft=false;
```

Figure 3 Schematic

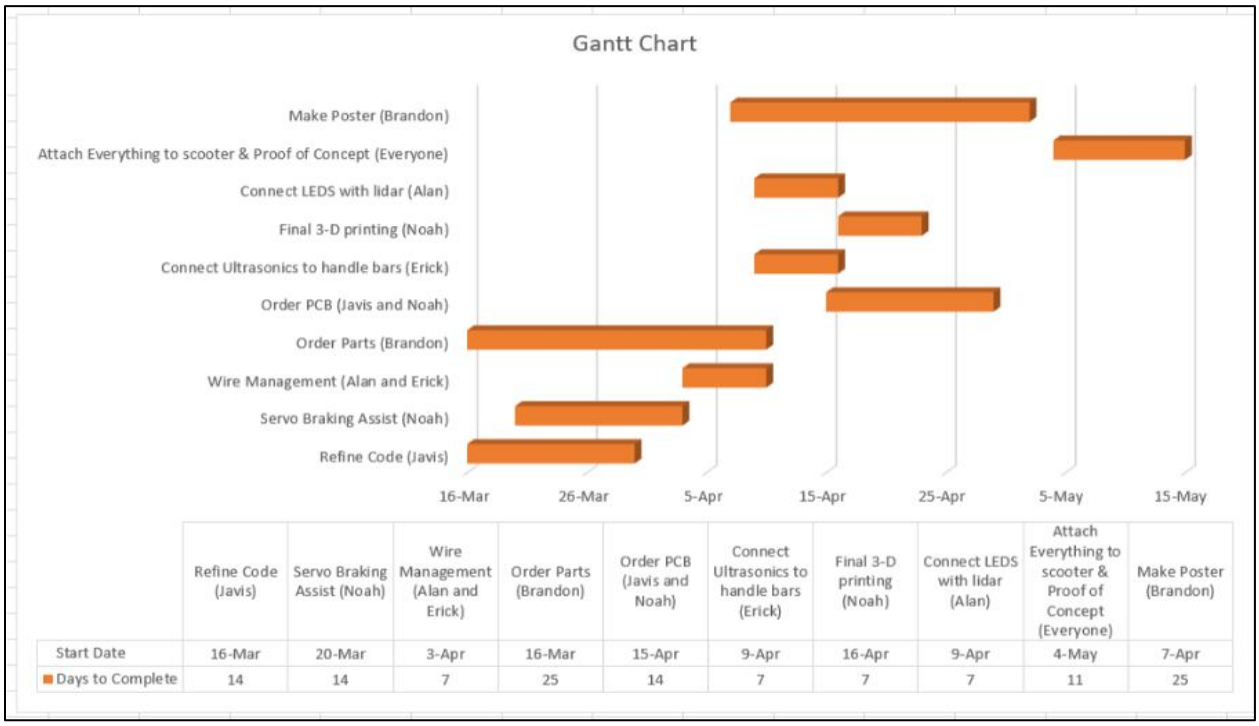

	Refine Code (Javis)	Servo Braking Assist (Noah)	Wire Management (Alan and Erick)	Order Parts (Brandon)	Order PCB (Javis and Noah)	Connect Ultrasonics to handle bars (Erick)	Final 3-D printing (Noah)	Connect LEDS with lidar (Alan)	Attach Everything to scooter & Proof of Concept (Everyone)	Make Poster (Brandon)
Start Date	16-Mar	20-Mar	3-Apr	16-Mar	15-Apr	9-Apr	16-Apr	9-Apr	4-May	7-Apr
Days to Complete	14	14	7	25	14	7	7	7	11	25

Figure 4 Gantt Chart

Part E. Computer Design Tools (CLO 4)

Designed and made with *Autodesk EagleCad*

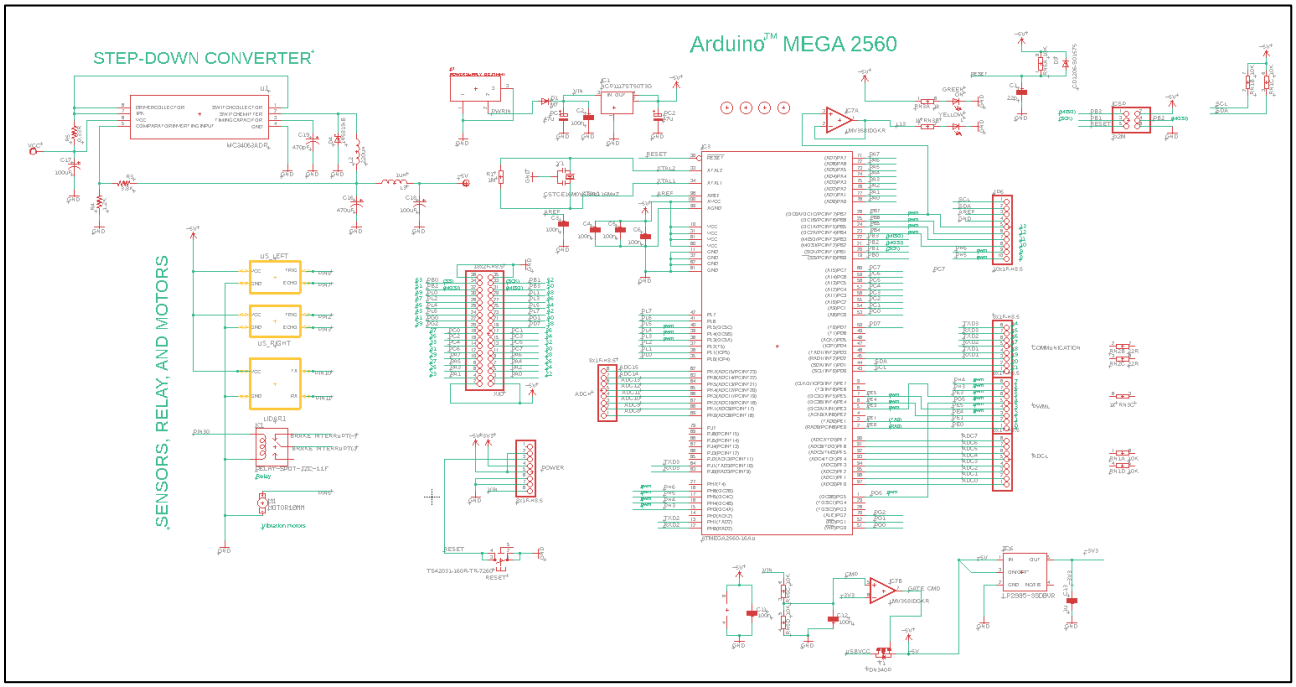

Figure 4 Schematic

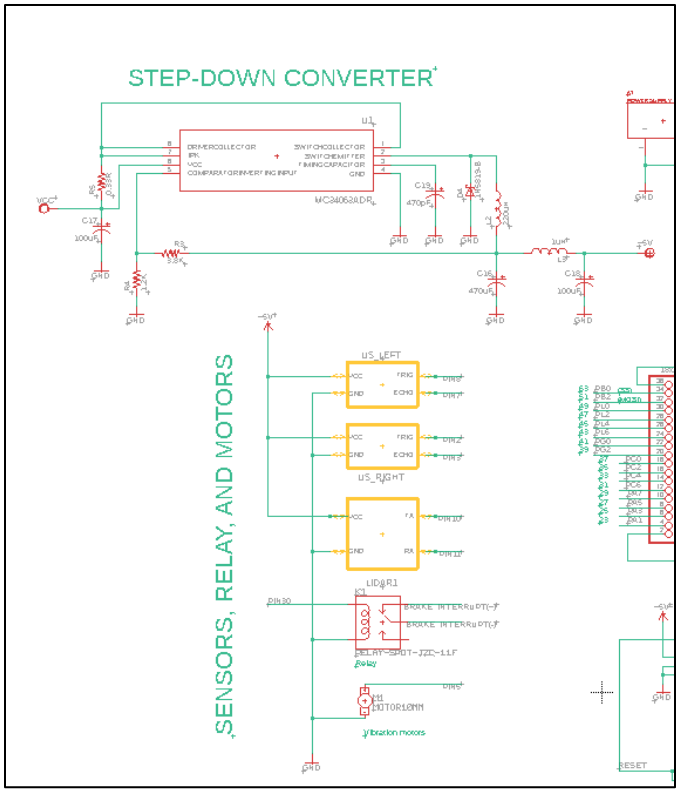
STEP-DOWN CONVERTER
SENSORS, RELAY, AND MOTORS
US_LEFT
US_RIGHT
LID@R1
MOTOR10MM
vibration motors

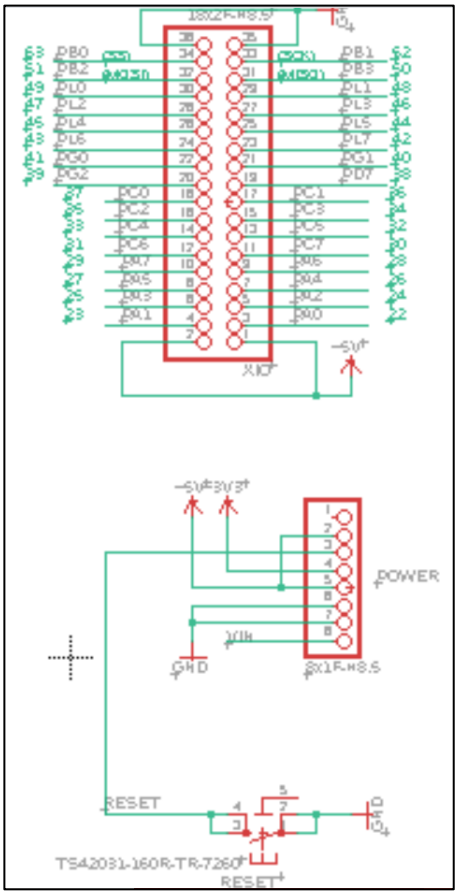
POWER
RESET
TS42031-160R-TR-7260

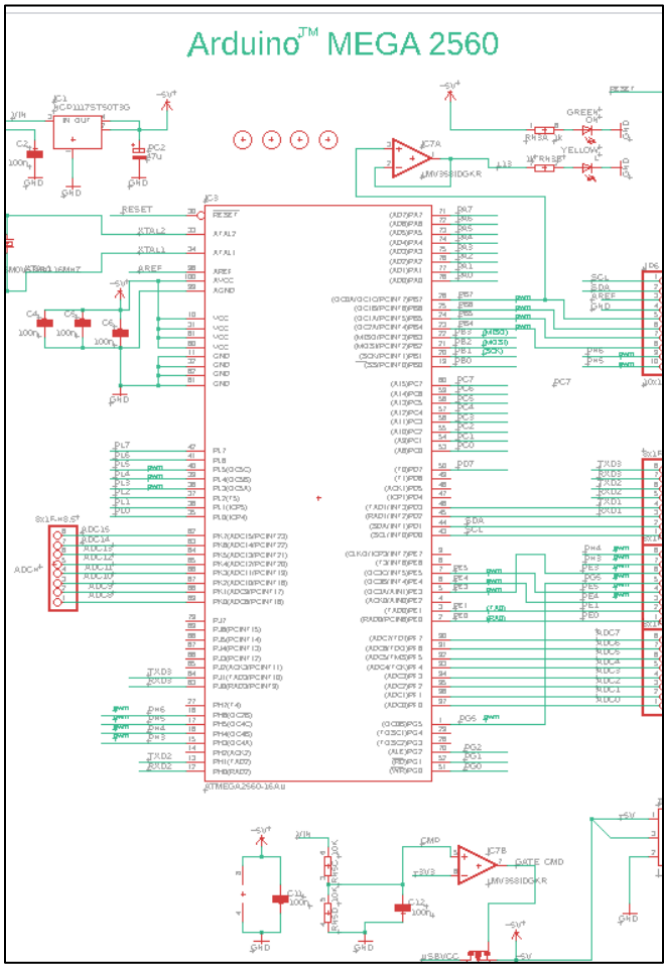
Arduino™ MEGA 2560

Part F. Patent and Standards Research Related to Design (CLO 6)

Given that the electric scooters affected by this project are a relatively new form of transportation not much has been done to modify them. Autonomous braking, and object avoidance has not yet been patented for these scooters. The closest technology that replicates our final project and that has been patented was done on mobility scooters and targets those, not riding scooters.

Essentially this patent for these mobility scooters object collision alert. Sensors were attached to the mobility scooter that would detect potential collisions and alert the user with a haptic method.

We believe that the technology on this scooter alone cannot be patented, given that we used simple sensors that have been around for years now. However, the combination and synergy of all the sensors working together as a unit not only alerts the user, but also autonomously stops the scooter, is more than likely a patentable product.

G. Proof of Concept (CLO 8)

Our approach to improving scooter safety involved the use of sensors that would be placed on the front and rear of the scooter. On the rear, we are using 2 Ultrasonic sensors (HC-SR04) that cover the left and right rear side of the rider and will alert them, letting them know that something is close behind. We want to place the sensors up at an angle to get a better range of detection. The Measuring angle of the ultrasonic is a 15-degree read from the center and in order to not have a blind spot, we placed the sensor at a 15-degree incline. The sensors have a maximum range of four meters and after doing testing our sensors were detecting distances up to two meters. Within those two meters, the data that was being read was not always accurate and occasionally random values were being read. A filter was implemented to reduce this error and after its implementation the number of incorrect values were reduced. Similarly, looking at the front of the scooter we are using a single Lidar sensor (TFMINI micro) that covers a straight path in front of the scooter. This should be noted that the lidar is not placed at an angle. Its maximum operating range is 12 meters and seen in our testing we were detecting objects up to 5 meters. The filtering code was also added to make sure it was reading accurate data. The way the ultrasonic alerts the user is by sending a signal to vibrating sensors that would be placed inside the handlebars. The rate of which the vibrators vibrate at is 12000 rpm. We compare to the rpm at which phones vibrate which is between 9000-12000 rpm. Considering we can feel the vibration when phones are in our pockets, if we have enough vibrators in series, running at the same rpm as smart phones, then we can feel it through the handlebars.

The three sensors and vibrators are connected and powered from an Arduino Mega which at first was powered by an external battery. We wanted our Arduino to be powered by the scooter's battery and only turn on when the scooter was being used. To do that we are using a step-down converter to bring the battery voltage down from 25 V to 5V. Our step-up converter has an input range of 6V-32V and an output range of 1.5-32V. To start tackling the brake assist, we are using a relay that is connected between the control and motor. Essentially, when the relay is open, the motor is killed. The relay directly communicates with the Lidar sensor which means if the lidar sees an object that is getting too close, it will send a signal to the relay telling it to open. When the relay is open the throttle will not work so the scooter cannot accelerate. At first there was a delay where the lidar would see an object and the relay would take time to turn off. Changes to the code were made to reduce the delay. We initially had a delay of about 14 seconds, but after adding interrupts in the code, it was able to bring it down to about .5 seconds. At first, if an object was 1 meter away, the lidar would operate. But after testing we found that adjusting the read distance to 5 meters it would be better in cases of avoiding collision. By killing the motor, we are not coming to a complete stop because the scooter still has momentum going forward. Knowing that, we have attached a servo motor to the hand brake so that it can squeeze it and start to brake. To place our devices onto the scooter we 3-D printed mounts to hold everything in place.

Response time for relay		
Trail 1	No adjustment	14 seconds
Trail 2	With interrupts	.5 seconds

Amount of false data read by sensors (from sample of 10 values)		
Trail 1	No adjustment	5-6 incorrect values
Trail 2	With filter	1-2 incorrect values

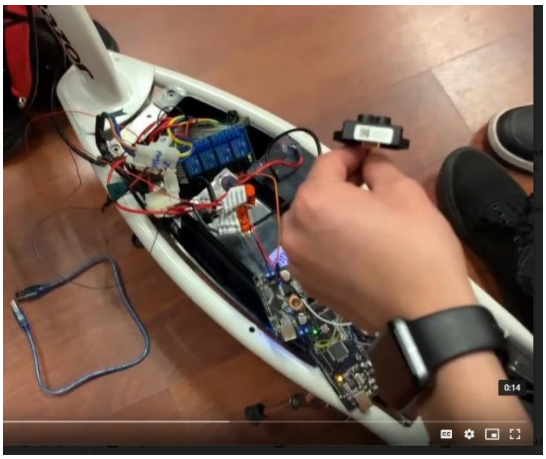

Lidar-Relay Step 1

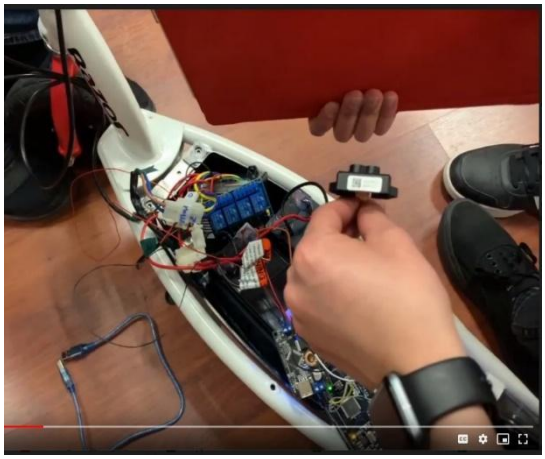

Lidar -Relay Step 2

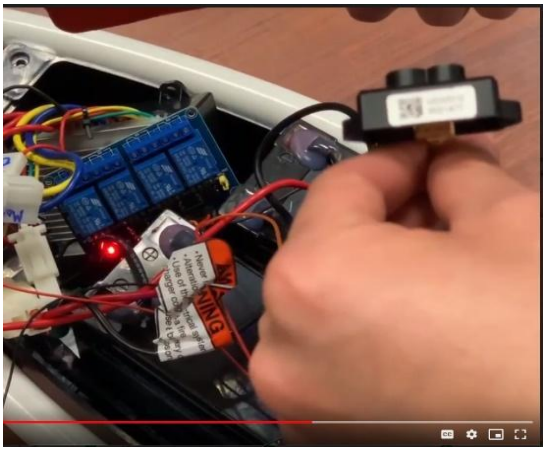

Lidar -Relay Step 3

Going through the steps above, we start on step one. There is no object in front of the lidar, so the relay is off which means that it is closed, and the motor is on. In step two we place an object in front of the lidar to simulate when an object gets too close to the rider. Then in step 3, now that the lidar has an object in front of it, it will tell the relay to open so that it can turn off the motor. The red LED on the relay is turned on letting us know that it is open. How we arrived at this solution was by reverse engineering the handbrake. We found out that there was a button and if it were to be pushed then the motor would be allowed to run, but when it is released the motor would cutoff.

Lidar-Servo Step 1

Lidar-Servo Step 2

As we mentioned above, when the relay kills the motor, the drive still has forward momentum and does not come to a complete stop. To help with that, we added a servo motor to the hand break which will automatically pull the brake when an object is too close to the rider. Step 1 shows the servo not pulling on the brake and step 2 shows the servo pulling the brake after the lidar has detected an object that is too close. Additionally, at step 2 the relay is on and the motor has been killed.

Stopping distance in a 29 ft room (8.83 meters)		
Lidar detect distance	Motor Stops (ft)	Motor Stops (m)
1 Meter	4.2	1.3
3 Meters	7.2	2.2
5 Meters	9.8	3

In a room that measures 29ft (8.83 meters) we had a chair at one end and the rider at the other. The rider rides towards the chair and we record when the motor stops. The motor stop columns say how far from the chair the motor stopped and different detect distances on the lidar gave us different stop distances. When the lidar is detecting an object five meters away the motor is stopped 9.8ft away from the chair, which is a good chance that the rider will not collide with a foreign object.

I. List of Project Design and Implementations Task and Responsibilities

Senior Design I Semester task's (All Completed)

Order the Scooter (Brandon T):
We did not want to wait for a reply from the manufactures, so we decided to order a scooter and play around with it.

Taking apart the scooter (Erick C. and Alan P.)
Took apart the scooter to see how the how layout of the internals is. We wanted to figure out how the power was being delivered to the scooter.

Prototype back ultrasonic sensors (Noah J)
The first prototype of the ultrasonic back sensors being implemented. We 3D printed a mount to fit the ultrasonic onto the rear of the scooter.

Vibration motors (Brandon T. and Erick C.)
We ran some basic C code to test how the vibration motor worked. We discovered that the motors work best in parallel as they have stronger vibration.

Lidar (Everyone)
When the Lidar sensor first arrived, we wanted to figure out how to use it. We struggled with how to connect properly and determined if we need a logic converter or not.

Senior Design II Semester

Make sure Lidar works (Javis Q):
At the end of senior 1, we were having trouble using our Lidar sensor because it would not show the distances that it was reading. Javis was responsible for troubleshooting the code.

Take measurements for 3-D printing (Noah J):
To place our devices on the scooter we wanted to 3-D print mounts that we could attach or screw onto the scooter. Noah was responsible for taking measurements of the scooter so that he could model and print the mounts.

Power Tap (Alan P. and Erick C.):
We did not want the Arduino to be powered by an external battery so we thought of using a step-down power converter so that the battery from the scooter could power the Arduino. Alan and Erick were responsible for finding a power converter and implementing it with the scooter's battery.

Order parts (Brandon T.):
Brandon is responsible for contacting Karla and ordering any additional parts that we need to further proceed with the project.

Wire Diagram (Brandon T.):
All our devices are connected to our Arduino, so we need to make a wire diagram to outline exactly how everything is connected and what pins we are using. Brandon was responsible for making the diagram to outline how the devices were connected using the Eaglecad program.

Connect ultrasonics to the vibrators (Alan P. and Erick C.):
We needed to connect the ultrasonic sensors to the vibrators that are located in the handlebar. Also, we must make sure that the vibration can be felt though the bars. Alan and Erick are responsible for making sure that the ultrasonic sensors send a signal to the vibrators so that they alert the rider. Also, they needed to how many were necessary in order to be able to feel the vibration.

Connect LEDs with Lidar (Alan P.):
When the lidar is assisting with the braking we want the rider to know that it is happening, so we wanted to have an LED light as an indicator. Alan is responsible for making sure the LED lights up when the scooter is braking.

Add relay (Noah and Javis):
To implement the assisted braking, a last-minute solution that we wanted to do was add a relay in the control wire to kill the motor. The relay is connected to the lidar sensor, where we hope that the lidar will tell the relay to open and close. Noah and Javis are responsible for making this connection work.

Make and practice presentation (Everyone):
For our midterm presentation everyone had to work on the presentation and be familiar with their parts.

Refine code (Javis Q.):
Since we started in senior 1, we have added and made a lot of changes to the code. What we have now works exactly how we want it too. Javis is responsible of making sure the code only has the essential parts and that it is easier to understand.

Servo braking assist (Noah J.):
Along with the relay, we wanted to add a servo on the hand brake to slow down the scooter when the relay kills the motor. Noah is responsible to see if a servo can be added onto the hand brake.

Wire Management (Alan P. and Erick C.):
During the midterm presentation we had a lot of wire tangled around the scooter. Alan and Erick are responsible to make sure the wires are hidden and that everything is organized and not in a mess.

Order PCB (Javis Q. and Noah J.):
Eventually we did not want to use an Arduino and thought that a PCB board could result in cleaner and simpler design. Noah and Javis are responsible for designing a new PCB board.

Final 3-D printing (Noah J.):
There were a few initial designs that we tested out to see if we could mount or devices to the scooter and eventually choose our final designs. Noah is responsible for printing the new designs and editing them so that they are stronger.

Noah M. Johnson

10364 W. Powers Ave. Littleton, CO 80127 •Cell: 720-261-7518 •E-mail: noah.m.johnson@outlook.com

Resume Profile:

Innovative problem solver who excels in creative solutions to provide customer satisfaction. Hard working. Takes pride in a job well done. Project and people-oriented employee with excellent interpersonal skills and a style that incorporates both appropriate humor and patience. Interest in control systems, robotics, automation, and remote sensing systems.

Education:

-Graduate from Dakota Ridge High School May 2016
-Attended UCCS (University of Colorado Colorado Springs) as an Electrical Engineering major 2016-2017
-Currently attending UCD (University of Colorado Denver) as an Electrical Engineering Major with a minor in Computer Engineering
**Transcripts are available upon request*

SKILLS:

MATLAB Simulink C C++ Python 3D Printing Solidworks (CAD) Fusion 360 (CAD) Autodesk Eagle (PCB Design) Visual Studio Assembly Microsoft Office Suite PSpice

WORK AND TRAINING:

- **Lockheed Martin RF COE Intern** **May 2019 – August 2019**
  - RF COE stands for Radio Frequency and Payload Center of Excellence
    - ✦ Worked developing a tool for the department that assists and automates various analyses on the Lockheed Martin Communications Payloads
    - Designed in Simulink and executed in Simulink (System Modeling tool)
    - Coded through MATLAB over 1000 lines of code
    - Works seamlessly between Simulink, MATLAB and Microsoft Excel
  - Organized various meetings
  - Presented to and met often with department about tool process
    - ✦ Clarity on the necessity of the team
    - ✦ For user functionality and ease of use for the team
- **Rocky Mountain Remodels** **June 2017 – May 2019**
- **Lowes** **May 2017 – Sep 2019**
- **King Soopers** **August 2014 - June 2017**

CLUBS AND HOBBIES:

- **Robotics Club** **2012 – 2016**
  - Competition involving teams fundraising and building larger robots to accomplish various goals. ○ Teams were not only judged based on robot performance, but also on teamwork, gracious professionalism, and spirit.
  - I was responsible for leading the electronics and programming section of the team.
- **Lockheed Martin Explorers Program** **2013-2015** ○ Team participated in three final projects including catapult launch, submarine build, and quadcopter obstacle course.
  - Involved much teamwork, planning, and hands on building.

- **Arduino**
  - Numerous college course with Arduino and Arduino IDE
    - C/C++ code
    - Assembly Code ○ Hobby
    - I really enjoy working with my hands and have been using Arduino ever since the early years of high school, and have completed numerous personal projects
- Automatic farm
- Automatic bird trap
- RF car
- Time capsule
  - This involves seeing a project from start to finish
- Plan -> Breadboard -> CAD -> 3D Print (often) -> PCB design (Eagle) -> Assemble (Solder using both surface mount and conventional soldering iron)

Awards, Honors, Memberships:

- First Robotics Competition (FRC) – Team 1799 **2013 – 2016** ○ Electronics/Programming team lead – 2016
- BEST Robotics Competition – Team 1799 2012 – 2014
- Lockheed Martin Explorers Program – Engineering 2013 – 2015
  - Final Project first place – 2013, best technical design 2014 & 2015
- Dakota Ridge HS Tennis 2012 – 2014
  - Varsity – 2012
- AIAA Conference with Edge Research 2013
- Dakota Ridge Honor Roll 2013 – 2016
  - Achieved 4.0 cumulative GPA – 2015 – 2016 Achieved above 3.5 cumulative GPA 2013 – 2015
- Summit Ministries Summer 2016

Community Service:

- Casa Hogar Orphanage Acapulco, México Summer 2014 & 2015
- Summerset Festival Summer 2015 • AVR team at Deer Creek Church Summer 2018

References:

- Phil Buksa
  Phone: 630-639-8543
  Relationship: Coworker/Mentor during Lockheed Martin Internship
- Joseph McCormick:
  Phone: 1(828)289-2007
  Email: joseph@deercreekchurch.com
  Relationship: Youth group leader and good friend.
- Jonas Melninkaitis
  Phone: 970-333-9898
  Relationship: Rocky Mountain Remodels boss, and neighbor.
- David Patterson:
  Phone: 765-678-9151
  Relationship: Did weather balloon launch with Dakota Ridge High School Robotics club and good friend

Brandon Thao

(720) 400-1346
6714 Amherst Ct. Highlands Ranch, CO 80130 Brandon.s.thao@gmail.com

PROFESSIONAL SUMMARY

Experienced in selling and interacting with various individuals as well as working in teams. Relationship builder and picture thinker who develops strategies for continuous improvements to deliver a customer centered approach in offering customized communication for services. Demonstrated teamwork, optimization of service, quality, and affordability to meet strategic targets, drive sales, control costs, and increase profit.

EDUCATION BACKGROUND

University of Colorado Denver School of Engineering, Design, and Computing
Bachelor of Science of Electrical Engineering
Computer Engineering Minor **Anticipated Spring 2020**

Arapahoe Community College August 2014 – May 2016
Littleton CO

RESEARCH

- **June 2019- August 2019**
  Conducted research for a professor of a single cell lithium ion battery where we tested the batteries capacity over time.

- **August 2019 – Present**
  Senior design project. The objective is to find a way to make electric scooters safer for the user and surrounding people.

TECHNICAL SKILLS

- Basic knowledge in programming language such as Python, C, Assembly, Matlab, and Verilog.
  - Coded a single cycle processer using Verilog.
- Knowledgeable in using Orcad/Pspice to design real circuits such as amplifiers.
- Office suite such as Excel, Word, and PowerPoint

EMPLOYMENT

Customer Service August 2019 – Present
CU Denver IT Service Desk

- Listened and helped customers with any technological issues they're having
    - Reset and unlocked university password and accounts
    - Mapping network drives
    - Setting up shared mailboxes
    - Adding/removing people from courses

Customer Service October 2017 – May 2019
TR Contractors LLC – Highlands Ranch CO

- Listen and respond to customers' needs and concern
- Provide information about products and services
- Data entry, take phone calls, and respond to emails
- Interact with clients and attend visits when needed
- Work remotely from home

Customer Service / Sales Associate / Service Tech June 2013 – August 2015
Millennium Trenz Wireless (Retail)

- Sales representative on in store sales
- Troubleshoot and repaired cellular devices
- Offer information about new products and answer questions
- Cashier, Inventory, and answer phone calls

Alan Prieto
8368 Shoshone St., Denver, CO 80221
(303) 264-7866 | alan.prieto@ucdenver.edu

OBJECTIVE

Seeking full time employment at an Engineering company after graduation. I am interested in pursuing job opportunities in the power industry. I am ready to move from being an intern to applying what I have learned to a full-time position.

TECHNICAL SKILLS

- MS Office, Windows 7/10
- C, Python, Matlab, and AutoCAD
- Synergi, Smallworld GIS, AcSELerator

SOFT SKILLS

- Communication
- Organized
- Quick Learner
- Attention to detail
- Time management
- Can work independently
- Commitment
- Self-Motivated

EDUCATION

BACHELOR OF SCIENCE: ELECTRICAL ENGINEERING • 5/2020
• UNIVERSITY OF COLORADO DENVER, *DENVER, CO*
College of Engineering, Design and Computing, ABET Accredited
GPA: 3.71/4.00

EXPERIENCE

SENIOR ENGINEERING INTERN • XCEL ENERGY

•MAY 2019 – PRESENT

- Gaining knowledge on how the electric distribution system is designed and operated
- Assisting senior engineers with the Smart Grid project by reviewing existing feeders to add smart devices
- Creating one-line diagrams for feeders that will be used for the Fault Location Isolation System Restoration project
- Developing settings for smart devices
- Supporting lead engineers on Integrated Volt Var project by analyzing models using Synergi software
- Working on additional tasks assigned by Engineering staff

STUDENT ASSISTANT II • OFFICE OF THE REGISTRAR

• OCTOBER 2017 – MAY 2019

- Processed, scanned, and indexed 400 student documents every week
- Assisted professional staff with various office projects
- Followed FERPA guidelines to maintain student confidentially

HONORS/CERTIFICATIONS

College of Engineering, Design and Computing Dean's List	Fall 2017 – Spring 2019
College of Liberal Arts and Science Dean's List	Fall 2015 – Spring 2016

Erick Chavez-Estrada

3145 W Arkansas Ave
Apt 111, Denver, Co 80219

erickchavez77@gmail.com
720-495-5525

Profile

- Worked in a team and independently for over 4 years of customer service
- Interested in using the knowledge obtained through my education and applying it to real world problems/systems
- Excited to take on responsibilities that will help me become a better engineer to help my future employer succeed in future projects

Education

University of Colorado Denver, Denver, Co Anticipated 05/2020

College of Engineering, Design and Computing, ABET Accredited GPA 3.581

Bachelor of Science: Electrical Engineering

Minor: Computer Engineering

Relative Academic Projects

Independent Study

- June 2019-August 2019
  - Utilized data collected from single cell lithium ion batteries to design models and observe data using MATLAB and Simulink

Senior Project

- August 2019-Present
  - The goal of the project was to determine a way to make electric scooters safer
  - Conducted interviews to learn what our stakeholders wanted from our product. Stakeholders included:
    - Michael J. Phibbs, Chief of Auraria Campus Police Department and Campus Safety
    - Carl Meese, Director of Campus Planning
  - Preliminary Design Review Presentation
    - Presented if front of 3 faculty members and 25 students
    - Presented our findings from interviews as well as prototype approach
  - Critical Design Review Presentation
    - Presented if front of 3 faculty members and 25 students
    - Demonstrated a working prototype of our project

Technical Skills:

- Basic knowledge for programing languages such as MATLAB/Simulink, Python, Verilog, and C
- Knowledge on designing circuits using software such as Orcad/Pspice
- Experience with Office Suite such as Word, PowerPoint, and Excel

Additional Experience

Cashier at Tamale Kitchen #4

- August 2015-Present
    - Establish or identify prices of goods, services or admission, and tabulate bills using calculators, cash registers, or optical price scanners.
    - Greet customers entering establishments.
    - Maintain clean and orderly checkout areas and complete other general cleaning duties, such as mopping floors and emptying trash cans.
    - Count money in cash drawers at the beginning of shifts to ensure that amounts are correct and that there is adequate change.
    - Calculate total payments received during a time period and reconcile this with total sales.

Cashier at Tamale Kitchen #4

- August 2015-Present
    - Inspect and clean food preparation areas, such as equipment and work surfaces, or serving areas to ensure safe and sanitary food-handling practices.
    - Ensure food is stored and cooked at correct temperature by regulating temperature of ovens, broilers, grills, and roasters.
    - Ensure freshness of food and ingredients by checking for quality, keeping track of old and new items, and rotating stock.

Javis Quach

20338 E 47th Ave, Denver, CO 80249 javisquach@gmail.com
720-757-8420 javis.quach@ucdnever.edu

Work Experience:

CU Anschutz Internship— Responsible engineer for designing a test board and developed a GUI to improve usability and ease of communications between devices.
Ball Internship— Responsible engineer for designing and implementing a test board that tests a flight board to ensure that it preforms as required using circuit analysis and a microcontroller.
CAM IT Help Desk —Solved technical problems for a wide variety of staff. This ranges from computers to VR gear.

Relevant Projects:

Ball Intern Remote Sensing Team (BIRST): Cooperate with other engineers to create an autonomous free roaming rover using GPS.
HyperLynx: Design, test and manufacture a lidar system for a prototype pod for SpaceX's HyperLoop competition.
Senior Design: Improved safety of electric scooters by implementing computer vision after talking with stakeholders to ensure cocreating of the product improving overall satisfaction.
Embedded Systems I: Designed and coded an autonomous free roaming robot from scratch. The robot used sound signals to determine where it.

Education:

University of Colorado Denver (May 2020 expected graduation): [August 2016-Present]
Bachelor of Science, Electrical engineer with minor in computer engineer - 3.7/4.0 GPA

Skills:

Programing: Java, Matlab, Quartus, Python, Unity3d, C, C#
Testing: RF assembly and test, environmental and electrical/RF test procedures and practice
Tech: MS: Word, PowerPoint, Spreadsheet, QT
Technical: Some experience with additive manufacturing, conventional machining

Relevant Courses:

*****Embedded systems(1 and 2)
* RF Lab and Antennas
*Advance Electromagnetic Fields and RF
*Computation Electromagnetic/RF

Professional Organizations:

- Tau Beta Pi
- SHPE (Society of Hispanic Professional Engineers)
- NHS (National Honor Society)
- FBLA (Phi Beta Alpha)

Awards:

- University of Colorado Denver Electrical Engineer Scholar
- 1st Place in FBLA Computer Game Design/Simulation(States)
- Reisher Scholar