College of Engineering and Applied Science
UNIVERSITY OF COLORADO DENVER | ANSCHUTZ MEDICAL CAMPUS

Infrasound Team 2: Rotary Woofer
Final Report
5/6/2020

Team Lead: Nichole Roberts, nichole.roberts@ucdenver.edu, nsrcolorado22@gmail.com

303-349-4937

Engineers:

Brendan Bauernschmidt, brendan.bauernschmidt@ucdenver.edu, 720-519-3825

Sami Butler, samantha.butler@ucdenver.edu, 720-278-1621

Sam Bebernes, sam.bebernes@ucdenver.edu, 720-999-4204

Jeff Thomas, jeffrey.thomas@ucdenver.edu, 303-552-8286

Ronald Shannon, ronald.shannon@ucdenver.edu, 937-543-2674

Description

Infrasound is below the lower limit of audibility which is classified as frequencies below 20Hz. Natural sources of infrasound are things like avalanches, earthquakes, volcanoes, and meteors. Some unnatural sources of infrasound booms are things like rocket or missile launches. Understanding how to detect infrasound has become important to the United States Military. Infrasound is useful because of its low frequency it can travel long distances and get around obstacles with little dissipation. For this reason, we are interested in working with infrasound to successfully use direction finding techniques to determine location and to operate in a GPS denied environment. Possible users could be military and search and rescue teams operating in tactical field environments. The US Military is our targeted stakeholder due to their interest in using infrasound detection technologies to detect where and when a missile launch occurs to help with national security. There have been studies about the use of infrasound to achieve direction finding by positioning sensors to isolate where the infrasound is emitting. These studies have been inconclusive when it comes to testing because detecting infrasound is difficult without a known continuous source. In order to solve these issues, it would be necessary to build a common source of infrasound so that the direction-finding systems could successfully isolate an exact infrasound emitter.

A way to produce low infrasound is to combine a subwoofer with a fan to include speaker voice coils to alter the pitch of the fan blades to achieve a much lower frequency using less power. This combination of materials is known as a Rotary Woofer. A Rotary Subwoofer is a type of subwoofer that produces very low frequency waves (infrasound) by using a voice coil's motion to change the pitch of fan blades to generate certain waves. The pitch of the blade can be changed using different input signals that are presented to the voice coil. One of the main

advantages of a rotary subwoofer is that the amplifier takes much less power to operate than a traditional subwoofer since it is only changing the pitch of the blades. Our project consists of 3D printed parts, magnets, sound coils, shafts and a motor to demonstrate the possibility and affordability of building an infrasound emitter, something that has not been perfected at a low cost. Ideally, we would want to test out emitter using infrasound sensors created by the Air Force Research Labs and alter the sensor's code in order to read our emitters infrasound generation. Due to lack of time and resources from the COVID-19 global pandemic our project was cut short to just a Rotary Woofer prototype.

Design Methodology, Constraints, Specifications, and System Requirements

Our concept of the rotary woofer originated from a similar notion explored by Bruce Thigpen of Eminent Technology. Our systems design is based heavily off the electromechanical concepts similar to Bruce's. The rotary woofer works much like a speaker. Current is sent through the voice coil, which produces a magnetic field in the wire. The voice coils magnetic field interacts with the permanent magnet's magnetic field and creates a force on the voice coil. The direction of the force depends on which way the current flows through the wire. The force induced pushes the voice coil which is attached to the wash plate connecting the individual blades allowing them to change pitch. The rotation of the blades acts as an amplifier and pushes far more air than in a normal speaker. This makes it much easier to reproduce low-frequencies. In normal speaker operation, the cone diaphragm can only move as far as the voice coil allows. Because of this, subwoofers do not actually transmit energy well with frequencies below 20 [Hz]. Our ideal design would have implemented a dual voice coil, with a magnet placed in between them. Bruce Thigpen's current rotary woofer model uses an AC induction motor,

spinning at 800 [rpm] or approximately 13 [Hz]. Our current design would ideally successfully implement the following changes:

- A dual voice coil, allowing for better control and possibly a lower load than using one coil, allowing our system to produce more power.
- A “coneless” design permitting a larger displacement of air over longer distances
- 3D printed high grade parts, which will be weatherproof, durable and lightweight
- A DC brushless motor, establishing a longer life-span

An overall systematic diagram, including both motor and voice coil control of our ideal finished product can be seen in figures 1 and 2 below.

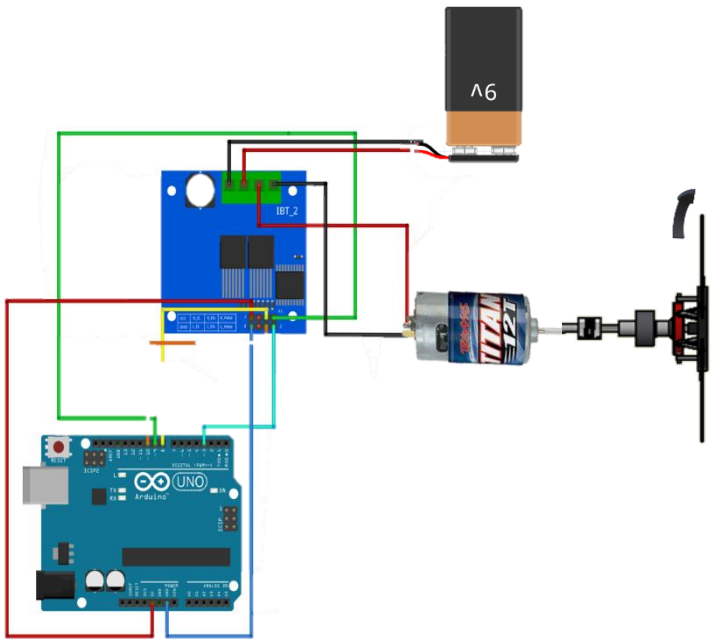

Figure 1. Ideal Motor Control Design

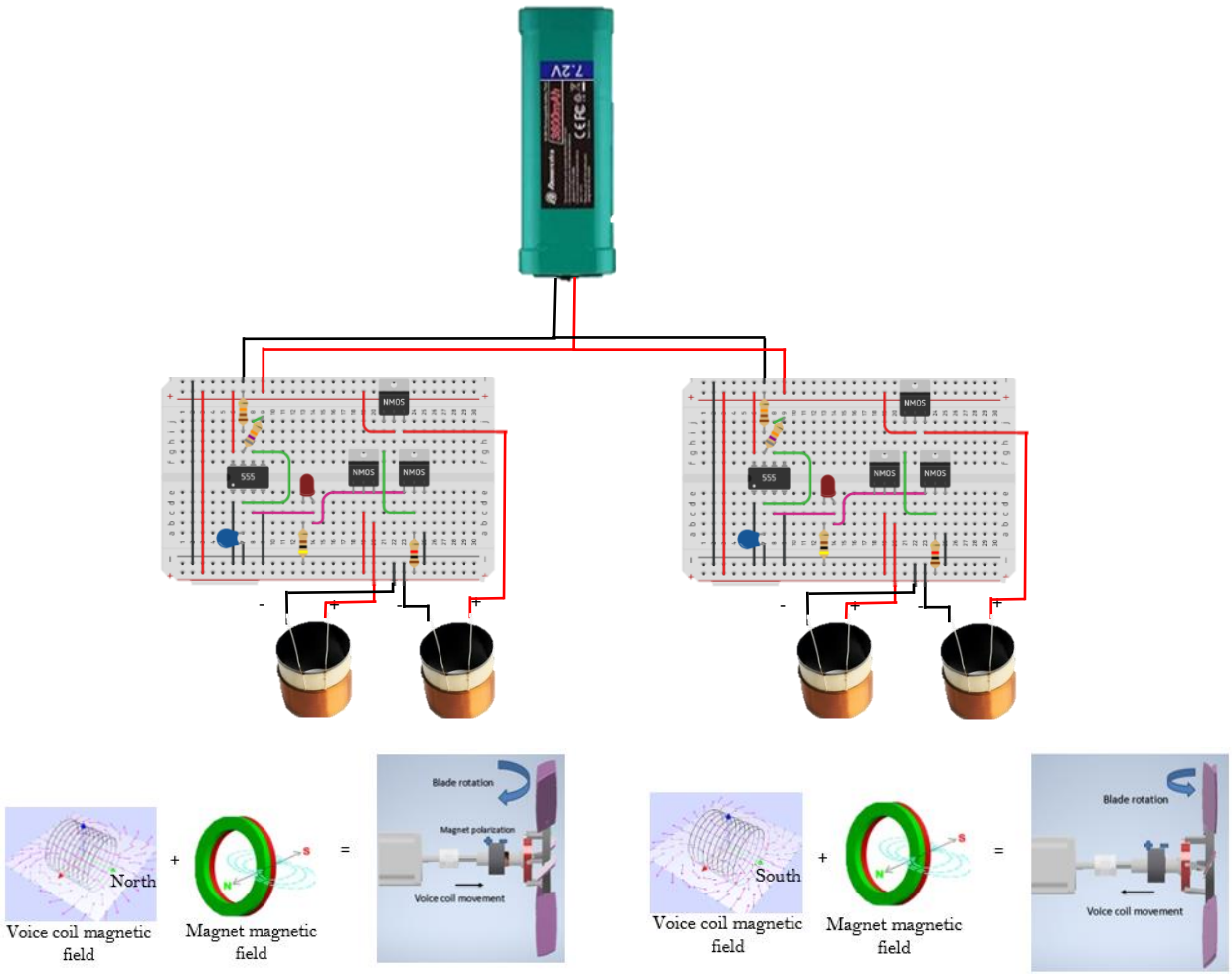

Figure 2. Ideal Voice Coil Control Design

Due to the ongoing Pandemic, we were unable to achieve our final build. Our overall design was scaled down, in order to save on costs, efficiency and practicality. The majority of the parts were 3D printed due to them being customizable, ecofriendly, light weight, durable, weatherproof, and cost effective. The initial constraints including our total budget of $2200, limited knowledge regarding infrasound and the inability to meet as a group for the majority of this semester caused this project to be very difficult to complete. With this being said we simplified our ideal design to implement only one voice coil as seen in figure 3 below.

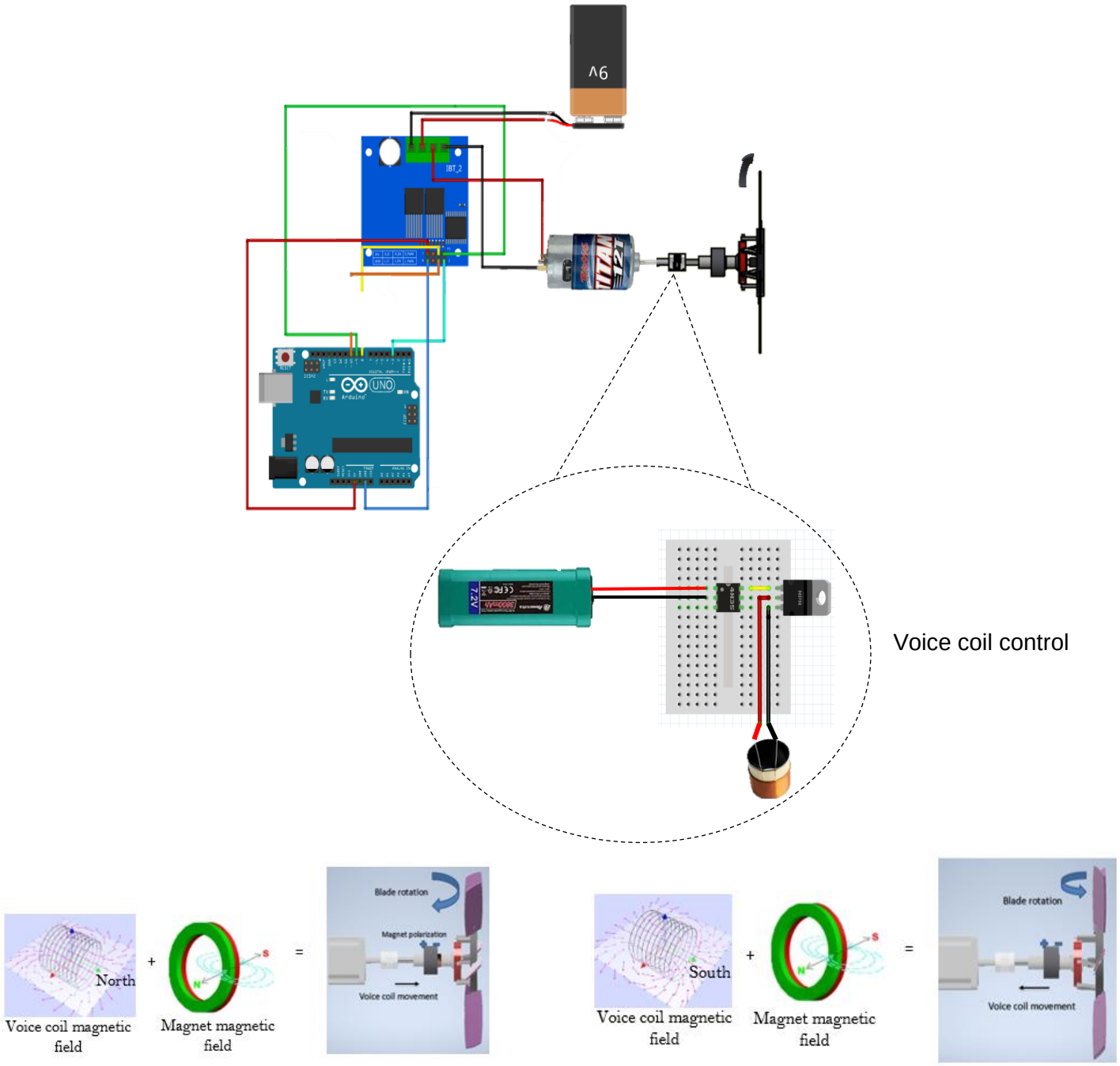

Figure 3. Current Systematic Design

System Diagram

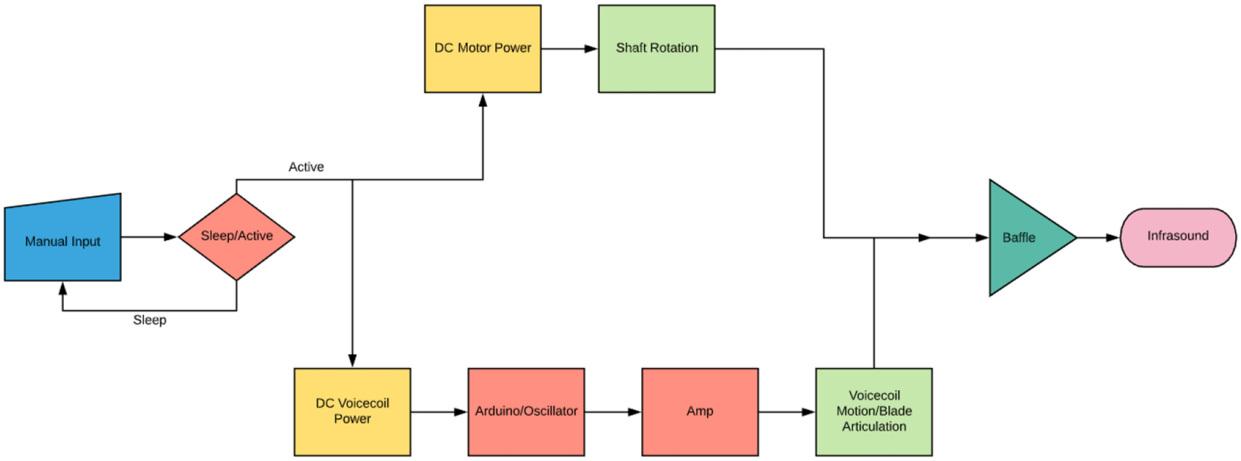

This diagram shows the ideal system application of our Rotary Woofer.

Computer Design Tools

The parts were designed using the CAD program Autodesk Inventor. The design of the parts is simple, they were meant to be a starting place to test and improve upon as testing continued. The parts were designed to be 3D printed to keep the cost, and weight down of the system. The blades must be symmetric, unlike the household fan blade, the blades need to move air in two directions. The bearing is used to keep the voice coils from rotating with the shaft, as it is difficult to electrically connect a spinning object to a non-spinning object without the use of slip rings. The oil embedded sleeve bearings provide extra support for the voice coils and allow for movement along the rotating shaft.

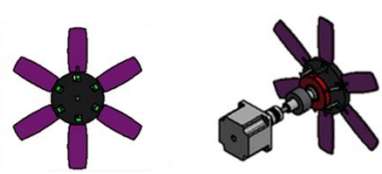

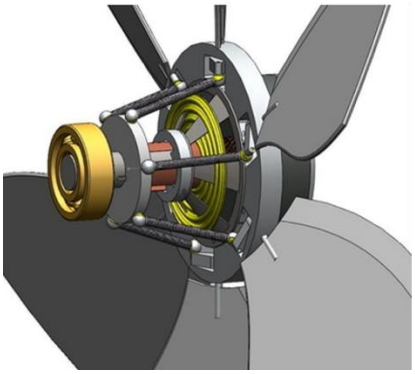

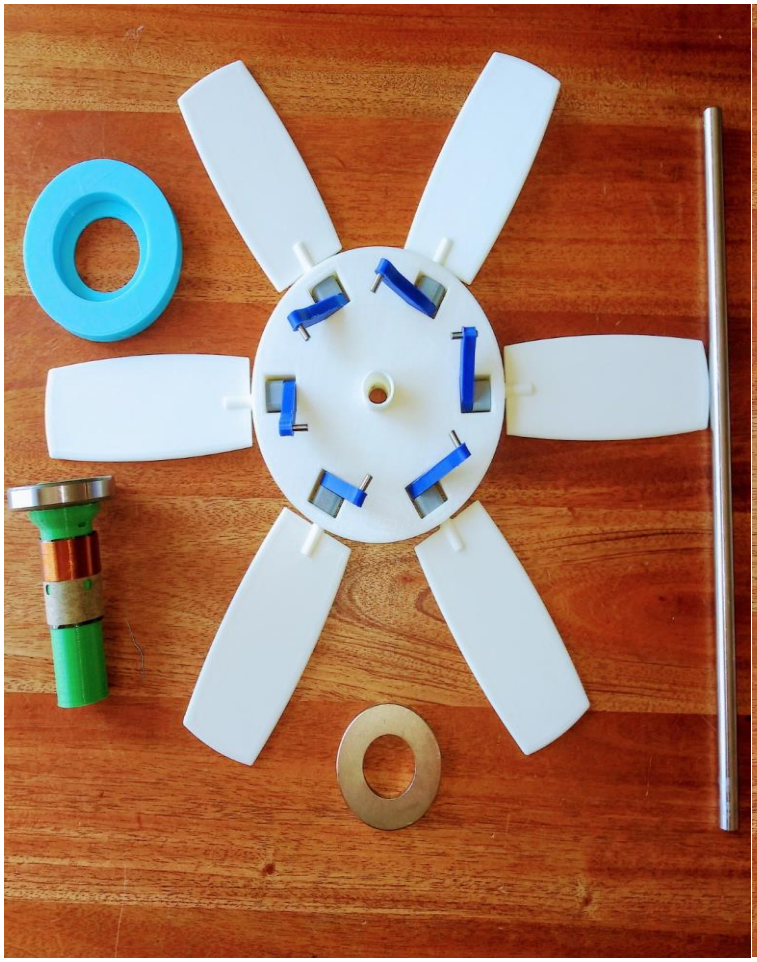

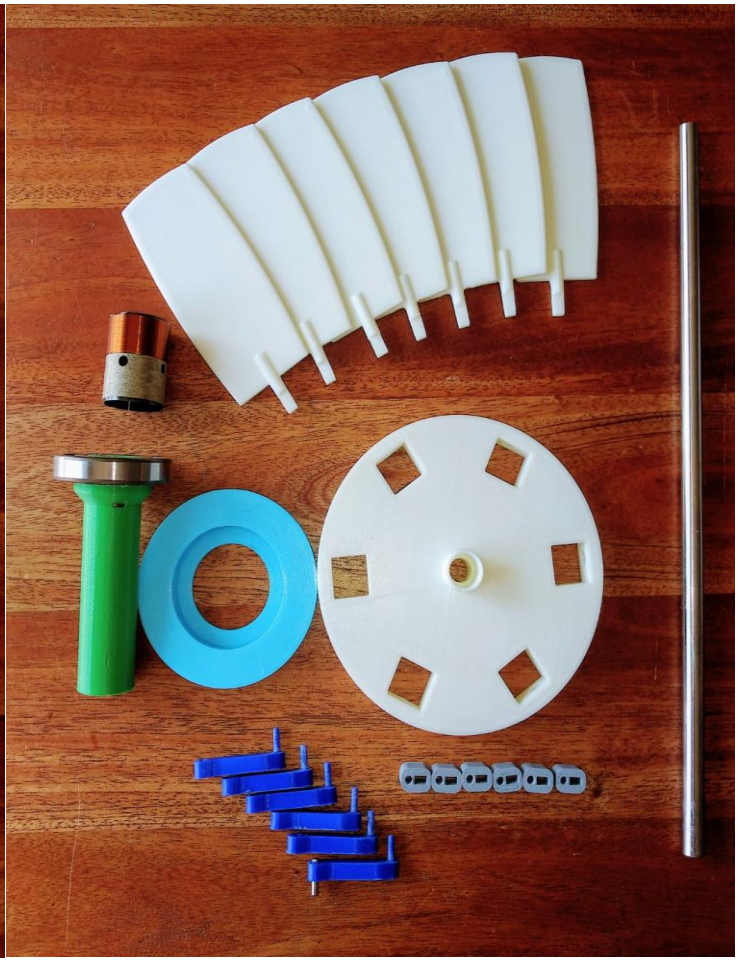

Software Sample

Motor Control with Arduino:

Arduino Code:

```
const int m_enar=8;//enable motor right
const int m_enal=10;//enable motor left
const int speedpin1=9;//PWM motor control right
const int speedpin2=3;//PWM motor control left
int input = 0;

void setup()
{
  pinMode(speedpin1,OUTPUT);
  pinMode(speedpin2,OUTPUT);
  pinMode(m_enar,OUTPUT);
  pinMode(m_enal,OUTPUT);
  Serial.begin(9600);
}
void loop(){
  digitalWrite(m_enar,HIGH);
  digitalWrite(m_enal,LOW);
  digitalWrite(speedpin2,LOW);
  check_input();
  analogWrite(speedpin1,input);
}

void check_input(){
  if(Serial.available()>=2){
     input=Serial.parseInt();
     Serial.print("New speed set to: ");
     Serial.println(input);
   }
  }
```

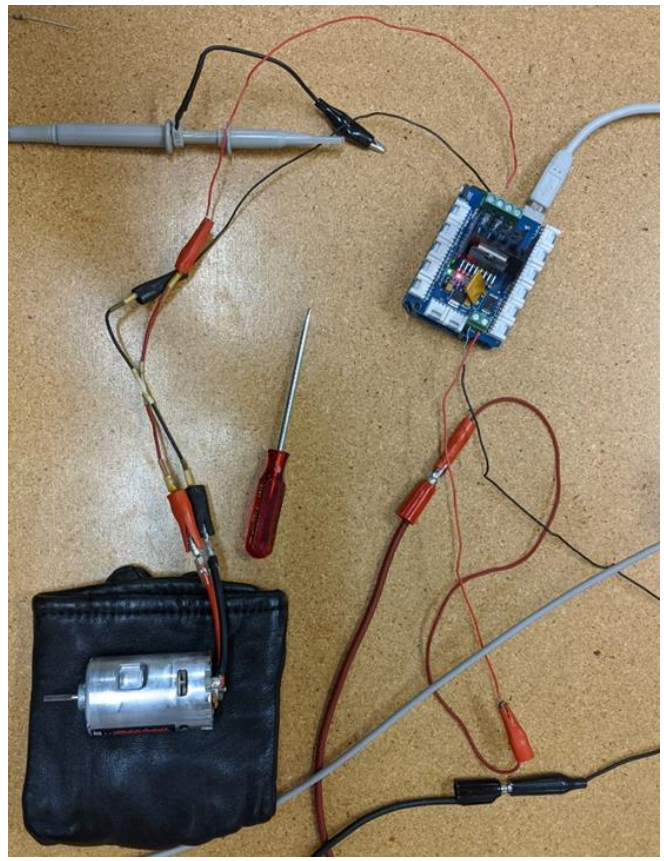

L298 Dual Full Bridge driver Arduino shield

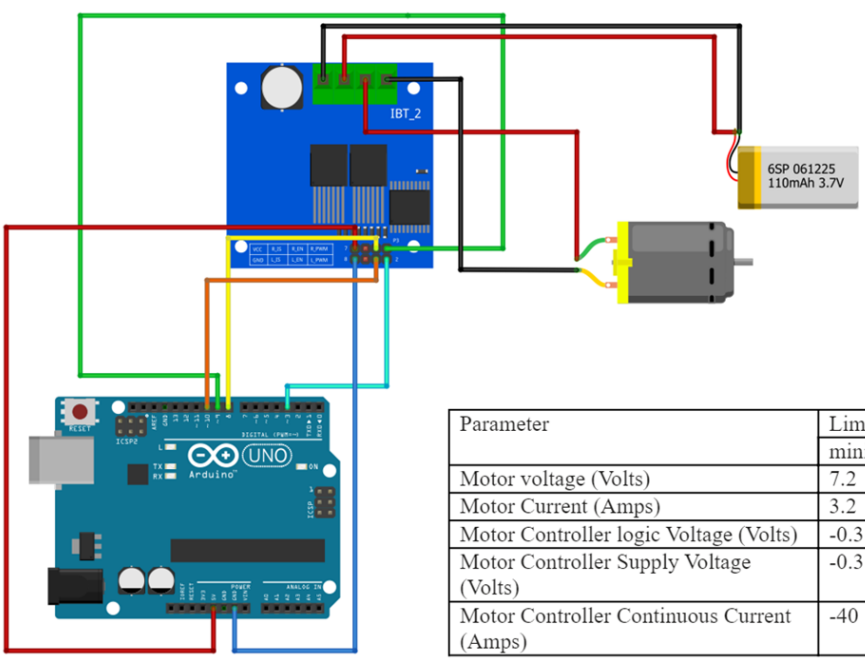

Parameter	Limits	
	minimum	maximum
Motor voltage (Volts)	7.2	8.4
Motor Current (Amps)	3.2	3.74
Motor Controller logic Voltage (Volts)	-0.3	5.3
Motor Controller Supply Voltage (Volts)	-0.3	45
Motor Controller Continuous Current (Amps)	-40	40

Voice Coil Circuit Control:

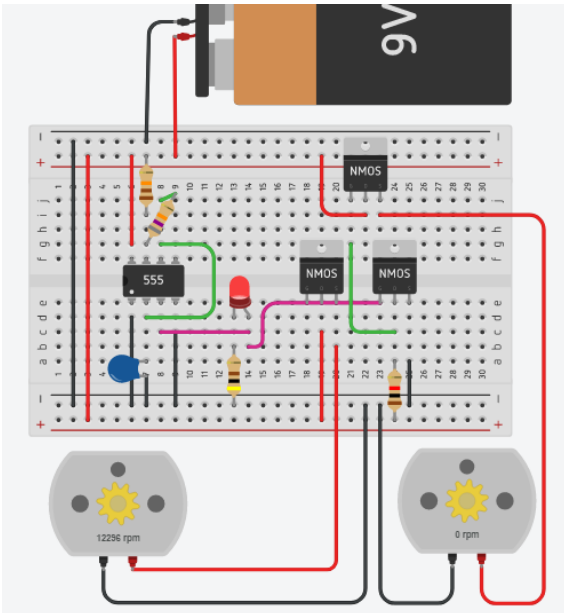


```python
def calculate_frequency(Capacitor,R1,R2):
    t_high=0.693*(R1+R2)*Capacitor
    t_low=0.693*R2*Capacitor
    frequency=1/(t_high+t_low)
    Duty_cycle=t_high/(t_high+t_low)
    print(Duty_cycle)
    if 0.49 < Duty_cycle < 0.6 and 1<frequency<20:

        f.write(str(frequency)+"......."+str(u)+"..."+str(y)+"..."+str(Duty_cycle)+"\n")

    #  Prints FREQUENCY.......R1...R2...DUTY CYCLE



f=open('resistors.txt','w')
for u in range(10000,100000,100):
    for y in range(1000,100000,100):

       calculate_frequency(1*10**-6,u,y)


    print(u)
f.close()

print("done")
```

The code is a Python script that calculates the duty cycle of a 555 timer IC, given capacitor and resistor component values. The 555 timer is not able to output a perfect 50% duty cycle so the closer to 50% the better, however it can be time consuming to do all of the calculations by hand, so we made the code do it for us. We wanted to have switches in the final product that select different resistor and capacitor banks to discretely alter the timing frequency, which would then change the frequency that the blades oscillate.

Component Lifespan

With a system of continually moving parts the lifespan of the system's components is a concern that enters the purview of this design project. While current circumstances prevented any physical test data some research was performed to identify the likely lifespan of the elements of the rotary woofer. From research the most probably component to initially fail will be the PLA 3D printed components. PLA while easy to work with has poor mechanical characteristics and has a lower tensile strength when compared to most other printing mediums. For use in a first

iteration prototype they should last for several hours of operation. These components would not withstand the reliability needs of a military portable device. PLA printed materials are not only brittle but will absorb moisture and deform from too high of ambient humidity. Further iterations would employ ABS or PETG. These materials have more favorable mechanical properties while maintaining the hardness and rigidity we would need from this project's 3D printed modules. The next element to likely fail would be out Titan 12T 550 DC brushed motor. While the motor does include elements for longevity, a built-in fan, its specific construction does not lend well to prolonged use. Originally produced for RC car applications most implementations outside that implementation seem to return less than desirable results. The next main component that will likely fail after the PLA plastic and DC motor is the Powerextra NiMH 7.2V 3000mAh batteries used in this design. From research on NiMH batteries they do pair well with the DC brushed motors but will eventually wear down through charging and discharging cycles. NiMH batteries should last for a minimum of 300 cycles if charged properly. This would set the batteries to far outlive the PLA elements and the DC motor. The last element observed for possible failure were the Koyo EE8C3 ball bearings. From research we were able to find an equation for the ball bearing lifespan (L10) estimation.

$$L_{10} = \frac{\left(\frac{C}{P}\right)^3 * 10^6}{60 * N}$$

C – Dynamic capacity of the bearing (2273 lbs)

P – Equivalent Bearing Load

N – Rotational speed in RPM (800 RPM)

Based on this equation, with the estimation of the equivalent bearing load to be less than 97 lbs, the bearing should last for about 30 years of operation. This longevity is partially due to the relatively slow speed of the rotary shaft. These four components were the only ones identified to likely be a cause of premature system failure.

Proof of Concept

The main idea of our Rotary Woofer is based on creating low frequency sound without using mass amounts of power. In order to do this, we focus on altering the pitch of the blade by using different input signals that are presented to the voice coil. There are a few working examples of rotary woofers that have been produced and deployed for practical uses. Eminent Technology has produced a rotary subwoofer, the TRW-17, that is intended for home audio use. This subwoofer is able to emit down to 5 Hz of infrasonic waves and can be used for home audio and home theater. Another use of rotary woofers is in the Niagara's Fury attraction at Niagara Falls. There are six woofers installed that are able to emit down to 1 Hz, that are designed to emulate the waves that are produced by the actual waterfalls. In addition to these, there are other examples and videos of DIY rotary subwoofer projects that can be used for various other purposes.

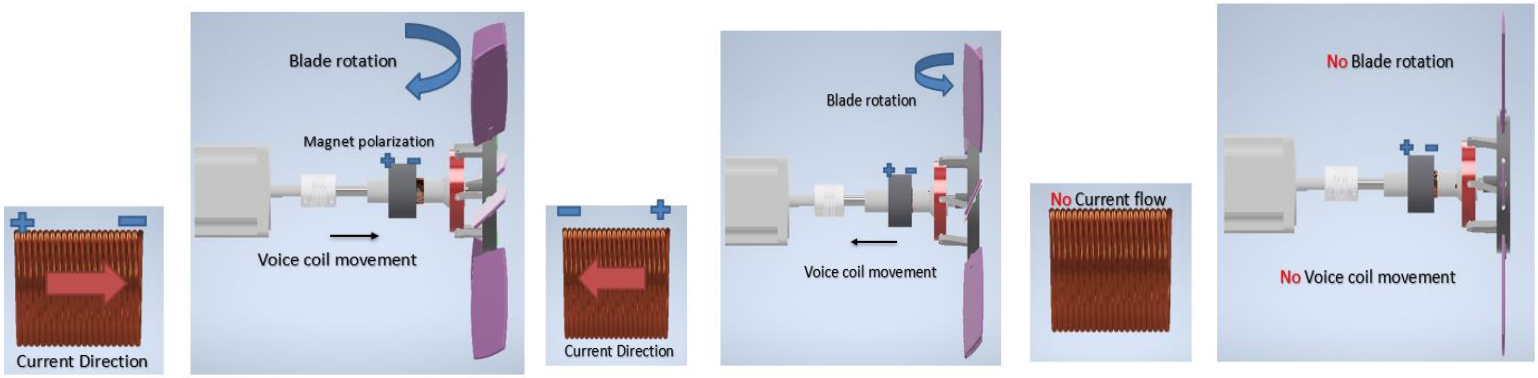

Airflow Control

The airflow from the output of the rotary woofer is designed to simulate the diaphragm of a typical subwoofer. This is achieved by modulating the pitch angle of the fan blades attached to the rotary shaft. The pitch angle actuator is driven by the electromagnetic response of a stationary magnet's interaction with a coil whose current is driven by a control circuit. The frequency of the change in current through our control coil directly corelates to the frequency of changes to pitch of the fan blades. This in turn produces modulated pressure waves at a controlled frequency directly related to that control coil's input current frequency.

Potential improvement: take a coil in this form (ends pointed together) mounted to the frame with the magnet on the rotary shaft. Basically, we have magnetic field formed equal and opposite of both sides of stationary magnet from a single coil, potentially double the force for a given power consumption and also eliminates need for slip rings and simplifies potential cooling needs.

Voice Coil Testing Data:

200 turns	Distance[inches]			400 turns	Distance[inches]	
Current[A]	Attract	Repel		Current[A]	Attract	Repel
1	0	0		1	0	0
2	0	0		2	0	0
3	0	0		3	0	0.125
4	0	0		4	0	0.25
5	0	0		5	0.0625	0.5
1 battery @7.2V	0	0		1 battery@7.2V	0.375	0.9375
2 -7.2V batteries in series	0.25	0.25		2 -7.2V batteries in series	1.25	2.0

Baffle Influence

The output of the front of the rotary woofer is a result of a modulated compression of the airflow emitted from the front of the rotary woofer. This inherently results in an equal and opposite, 180 degrees out of phase, air compressions being produced at the backside of the rotary woofer. Due to the fact the infrasound waves have little to no dissipation over small distances when the pressure waves produced from the back and front meet, they function in like manner to noise cancelation technology and result in a nullified wave. To avoid this a baffle is employed to ensure the two opposite waveforms do not directly recombine and invalidate the product of the rotary woofer.

Rotary Shaft Control

The power supplied to the rotary shaft is controlled by an IBT-2 motor controller based on signals generated by an Arduino Uno. The IBT-2 utilizes an SN74AHC244DW input buffer Integrated Circuit that feeds to dual high current PN half bridge BTN7970 ICs. The half bridges work together to provide a circuit path to supply power to the rotary shaft motor. From research the optimum speed of the rotary shaft is around 800 RPM. Varying the Arduino pulse width modulation (PWM) signal delivered to the motor controller can be tuned to maintain the rotary shaft at this speed. Feedback from a rotary encoder not priced out previously in this project could be implemented to maintain rotary shaft speed at optimal rotation speed.

Through testing on a lower grade motor controller (L298N), we were able to obtain a sample of what the power delivered would look like for the motor. Due to the current circumstances similar testing was unavailable for final design components. The following figures depict the power seen by the motor for an Arduino pulse width modulation (PWM) of 200 out of 255, followed by a waveform depicting the power used by the motor at a PWM setting of 128.

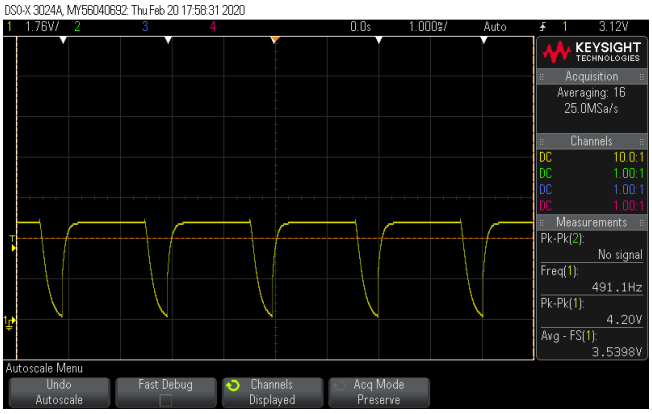

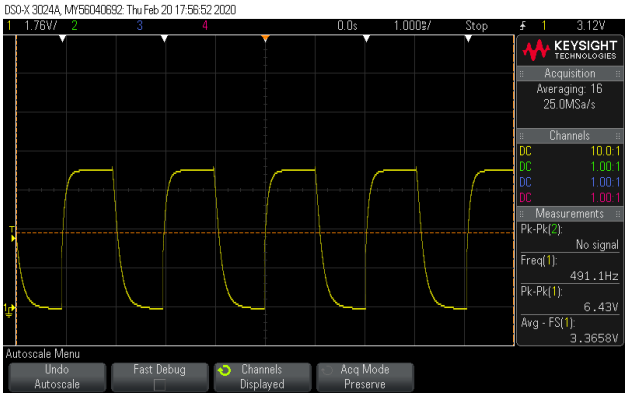

Due to the current circumstances and travel restrictions at the time of this project certain components were divided from others making full testing of rotary shaft actuation and control unattainable. Testing of the Arduino control code was performed utilizing a small 3V DC motor on hand at the same location as the IBT-2 motor controller. Due to the minimum voltage inputs to the IBT-2 exceeding the voltage of the motor the output was stepped down via LM3171 Voltage regulator. This was used to translate the DC source of 9V down to the specified range for the motor on hand. The following image is a depiction of the final design implementation for the rotary shaft control. The IBT-2 has connections, left unattached for this project, for over current detection. Given the rated current for the PN half bridge ICs is 40 amps of continuous current and since the motor current limit is far below these connections are superfluous for this project.

Patent Research

The inventor of the rotary woofer was a man by the name of Bruce Thigpen. Bruce Thigpen worked for Eminent Technologies and has made several versions of his rotary woofer or transducer which is capable of producing frequencies between 0-35 Hz. The first patent found by Bruce Thigpen which references a transducer is dated at December 9, 1989; and was filed in March of 1987. There is also an installation of 6 rotary woofers at the Table Rock House at

Niagara Falls. This installation uses the electrical room below as the back chamber or infinite baffle to produce infrasound that recreates the low frequency sound that is produced by the falls. Patent searches show that in recent years Bruce has been trying to use this technology to deter birds from their flight paths. Bruce has made several improvements to his initial design and has filed for multiple patents. Most of his patents are for various pieces of audio equipment including the rotary woofer. No other patents were found that relate to the specific type of woofer we designed, although patents for use of this technology were found. An example of this was found on google patents. A patent was found for a "Rotary subwoofer marine seismic source." This is essentially a rotary woofer installation on a ship that would generate infrasound to map subsurface topography.

Despite several search attempts, there was very little information found on IEEE standards for sub-audio speaker systems. Most of the information on infrasound standards that was found was for the detection of infrasound in the atmosphere rather than sending infrasound. This includes detection of environmental sources such as volcanoes and manmade sources such as wind turbines. In an article found on sciencedirect.com, it mentions that "the absence of protection standards for infrasound relates to difficulties in measurement at these low frequencies." It appears that standards for infrasound emission/protection have not yet been put into place, or they are not easy to find.

Our design is not one-of-a-kind, but the portability of the system would be. One of the ideas we had was to use this device to make an array of navigational beacons. The application of this technology as a navigation system has been proposed, but not in the same way. A technical paper that dates to September 2014, from semanticscholar.org illustrates how infrasound may be

used by UAVs, or unmanned aerial vehicles, as a secondary form of navigation. Our system differs in that it would be used for personal navigation in GPS denied environments and may be patentable.

Marketing Brochure

AIR FORCE RESEARCH LABORATORY

AIR FORCE CONTACT: JOHN MACINTIRE

EMITTING INFRASOUND IN GPS DENIED ENVIRONMENTS

CONTRACTED BY THE UNITED STATES AIR FORCE RESEARCH LABS TO ENHANCE CAPABILITIES OF EMITTING AND DETECTING INFRASOUND FREQUENCIES.

THANK YOU TO EVERYONE FROM THE AIR FORCE RESEARCH LABS THAT GAVE THEIR KNOWLEDGE TOWARDS THIS PROJECT.

THANK YOU TO THE UNIVERSITY OF COLORADO DENVER AND THE ELECTRICAL ENGINEERING STAFF FOR SUPPORT.

ROTARY WOOFER

UNIVERSITY OF COLORADO DENVER
1201 LARIMER ST,
DENVER, CO 80204

TEAM LEAD
NICHOLE.ROBERTS@UCDENVER.EDU
303-349-4937

College of Engineering and Applied Science

ROTARY WOOFER

UNIVERSITY OF COLORADO DENVER

SENIOR DESIGN 2020

College of Engineering and Applied Science
UNIVERSITY OF COLORADO DENVER | ANSCHUTZ MEDICAL CAMPUS

The purpose of a Rotary Woofer is to create low hertz frequencies without suing a subwoofer

Subwoofers use extreme amounts of power so in order to avoid using a subwoofer, a Rotary Woofer is able to generate the low frequencies by a motor controlled at constant speed that rotates a set of blades at a pitch connected to a voice coil and magnet. As the blades pitch while rotating a pressure wave is generated, the degree of pitch controls the amplitude of the pressure wave allowing air to transition through the blades.

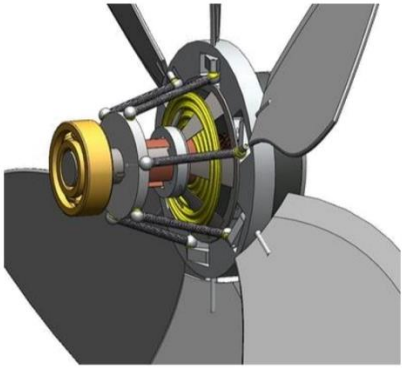

3D CAD Drawing of Rotary Woofer Fan Blades

Concept

Oscillating of the pitch of the blades creates sound while they are rotating. The aerodynamic affects and area swept versus frequency allow the displacement of the rotary woofer pitch mechanism to barely increase as the frequency goes down.

A baffle might be needed for 'attenuating' the back-propagating wave, typically sound baffles are installed to break up reflection paths, and increase attenuation by a 'surface' like the ceiling.

Team

The Rotary Woofer University of Colorado Denver Senior Design team contains six electrical engineering undergraduates.

Project Lead: Nichole Roberts

Engineers:

Sam Bebernes

Sami Butler

Jeffrey Thomas

Ron Shannon

Brendan Bauernschmidt

Rotary Woofer Design

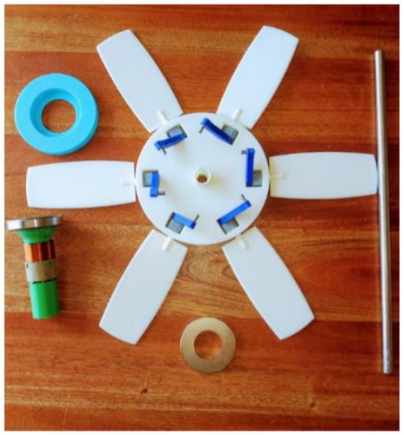

Materials:

- Fan Blades
- Connectors
- Voice Coil
- Magnet
- Shaft
- Motor
- Couplers

Future:

- Infrasound Sensor Testing
- Motor Control Testing
- Baffle Testing – to lower frequency as needed
- Environment Testing

College of Engineering and Applied Science
UNIVERSITY OF COLORADO DENVER | ANSCHUTZ MEDICAL CAMPUS

Gantt Chart

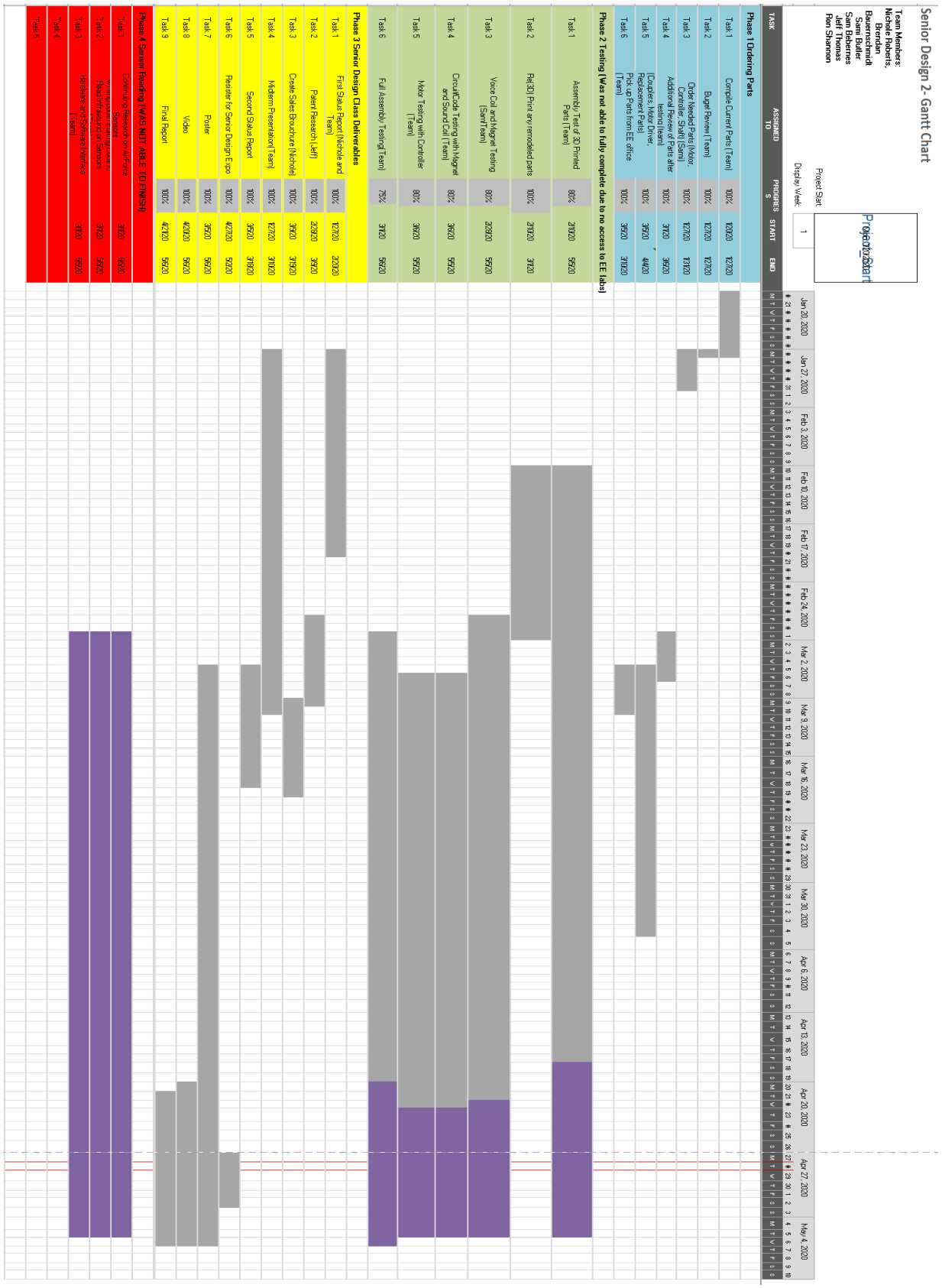
Senior Design 2- Gantt Chart
Team Members:
Nichole Roberts,
Brendan Bauerneschmidt
Sam Butler
Sam Babernes
Jeff Thomas
Ron Shannon
Project Start:
Display Week:
1
TASK
ASSIGNED TO
PROGRESS
START
END
Jan 20, 2020
Jan 27, 2020
Feb 3, 2020
Feb 10, 2020
Feb 17, 2020
Feb 24, 2020
Mar 2, 2020
Mar 9, 2020
Mar 16, 2020
Mar 23, 2020
Mar 30, 2020
Apr 6, 2020
Apr 13, 2020
Apr 20, 2020
Apr 27, 2020
May 4, 2020
Phase 1 Ordering Parts
Task 1 Compile Current Parts (Team) 100% 12/20/20 12/27/20
Task 2 Bugat Review (Team) 100% 12/27/20 12/27/20
Task 3 Order Needed Parts (Motor, Controller, Shaft) (Sam) 100% 12/27/20 1/31/20
Task 4 Additional Review of Parts after testing (team) 100% 3/1/20 3/6/20
Task 5 (Couplers, Motor Driver, Replacement Parts) 100% 3/5/20 4/4/20
Task 6 Pick up Parts from EE office (Team) 100% 3/5/20 3/10/20
Phase 2 Testing (Was not able to fully complete due to no access to EE labs)
Task 1 Assembly Test of 3D Printed Parts (Team) 80% 2/10/20 5/6/20
Task 2 Re(3D) Print any remodeled parts 100% 2/10/20 3/1/20
Task 3 Voice Coil and Magnet Testing (Sam/Team) 80% 2/23/20 5/6/20
Task 4 Circuit/Code Testing with Magnet and Sound Coil (Team) 80% 3/6/20 5/6/20
Task 5 Motor Testing with Controller (Team) 80% 3/6/20 5/6/20
Task 6 Full Assembly Testing(Team) 75% 3/1/20 5/6/20
Phase 3 Senior Design Class Deliverables
Task 1 First Status Report (Nichole and Team) 100% 12/7/20 2/20/20
Task 2 Patent Research (Jeff) 100% 2/20/20 3/1/20
Task 3 Create Sales Brouchure (Nichole) 100% 3/3/20 3/13/20
Task 4 Midterm Presentation (Team) 100% 12/7/20 3/10/20
Task 5 Second Status Report 100% 3/6/20 3/16/20
Task 6 Resister for Senior Design Expo 100% 4/27/20 5/1/20
Task 7 Poster 100% 3/6/20 5/6/20
Task 8 Video 100% 4/20/20 5/6/20
Task 9 Final Report 100% 4/21/20 5/6/20
Phase 4 Sensor Reading (WAS NOT ABLE TO FINISH)
Task 1 Continuing Research on Airforce Sensors 3/1/20 5/6/20
Task 2 Read Infrared and Sensors 3/1/20 5/6/20
Task 3 Hardware and Software Interface (Team) 3/1/20 5/6/20
Task 4
Task 5

Detailed list of Responsibilities

- Nichole – Team lead/project management/team engagement/planning/scheduling/deliverables
- Brendan – 3D printed parts/proof of concept research
- Sami – Ordering parts/budget planning
- Sam – Voice coil testing/3D printed parts design/ circuit power control design
- Jeff – Patent Research
- Ron – Motor testing/proof of concept research

From senior design one our project design, implementations tasks and responsibilities have changed a lot due to difficult circumstances. Last semester we were more focused on providing deliverables such as preliminary and critical design reviews, design process improvement tasks and other reports more than focusing on prototyping. Each team member has had specific assignments throughout Senior Design 1 following into Senior Design 2. A summary of the responsibilities of each team member is as follows:

- The team lead Nichole Roberts has always had focus on assignment deliverables and deadlines every week, formatting those deliverables into professional presentations to turn in and helping with proof of concept research to ensure what we test is feasible.
- Brendan Bauernschmidt has had his main focus on proof of concept research to understand what the objective is and how it is feasible. This has been an ongoing effort on lots of deliverable tasks.
- Sami Butler, has been focused on budgeting, ordering materials and ensuring the smooth flow of the design process. She helps on all deliverables assisting with formatting and functionality.

- Sam Bebernes has been the main engineer of this project. Sam has designed on CAD the 3D printed parts, assembled the 3D parts, build homemade sound coil and conducted testing, built circuitry from battery power control and helped make schematics and diagrams to complete class deliverables.
- Jeff Thomas has helped with providing input on previous designs of the Rotary Woofer and conducted patent searches to ensure that our model is unique.
- Ronald Shannon is the newest member on our team and joined at the start of senior design 2. Since he was previously on an infrasound sensor design team he had a very good idea of the objective on the project and could supply even more information from what his old team had discovered. Since he has been on our team, Ron has supported motor selection, testing and controls to combine into our fully assembled prototype.

References

(2015, January 27). Retrieved November 11, 2019, from https://www.youtube.com/watch?v=nOVXcVBd-Zs&t=262s.

(2016, November 4). Retrieved November 11, 2019, from https://www.youtube.com/watch?v=6LaIoi-u5WI

(2016, November 11). Retrieved November 11, 2019, from https://www.youtube.com/watch?v=fb7nYEpqIys&t=1640s

(2016, November 15). Retrieved November 11, 2019, from https://www.youtube.com/watch?v=7IE9yLK9d_4&t=8s

Technology, E. (n.d.). TRW-17. Retrieved November 11, 2019, from http://www.rotarywoofer.com/.

https://ntp.niehs.nih.gov/ntp/htdocs/chem_background/exsumpdf/infrasound_508.pdf

http://www.rotarywoofer.com/trw17pricing.html

https://www.soundandvision.com/content/eminent-technology-trw-17-rotary-subwoofer

http://www.rotarywoofer.com/niagara%20fury%20index.html

A Portable Tactical Field Sensor Array for an Infrasound Direction-Finding and Positioning System
John P. McIntire (AFRL/711HPW), Duy K. Nguyen (AFRL/RQ), Eric T. Vinande (AFRL/RY), and Frederick C. Webber (AFRL/711HPW)
"Rotary Woofer." Wikipedia, Wikimedia Foundation, 23 Sept. 2019, https://en.wikipedia.org/wiki/Rotary_woofer.

https://pdfs.semanticscholar.org/64a5/140ad19e4594d9fdcd9c8b2bf00e197726bf.pdf

https://patents.google.com/patent/US20090316523

https://patents.justia.com/inventor/f-bruce-thigpen

https://www.sciencedirect.com/science/article/pii/S0079610706000885

https://batteryuniversity.com/learn/article/charging_nickel_metal_hydride

https://amfg.ai/2018/07/02/pla-3d-printing-all-you-need-to-know/

https://www.amroll.com/bearing-selection-load-life.html

https://www.applied.com/c-brands/c-koyo-corp-/ee8c3/EE-Series-Small-Inch-Size-Ball-

Bearing/p/102114507

College of Engineering and Applied Science
UNIVERSITY OF COLORADO DENVER | ANSCHUTZ MEDICAL CAMPUS

Resumes

Samantha Butler

720-278-1621 | samantha.butler@ucdenver.edu | Denver, CO |

Electrical Engineer undergraduate student primarily interested in embedded systems, digital hardware design, firmware, autonomous vehicles, and data science Excellent interpersonal and communication abilities and possess a wide range of technical skills. Enjoys being part of a team and thrives in high pressure and challenging working environments.

TECHNICAL SKILLS

- C/C++, Python, Verilog, FPGA Development, Logic Design, Quartus, PSPICE, Microsoft Office and excel, Oscilloscope, Limited Assembly, Forklift driving, Power tools

EDUCATION

University of Colorado Denver **GPA**: 3.8 **Denver**
B.S. Electrical Engineer, graduation December 2020

- **Activities**: Robotics Club, Society of Women Engineers (SWE), Learning Resource Center tutor, undergraduate research projects, CU Denver Women's Soccer team
- **Relevant coursework**: • Logic Design and lab • Circuit Analysis I and II • Electronics I and II • Embedded Systems I and II • Digital Hardware Design • Linear Systems • C/C++

Front Range Community College **GPA:** 4.0 **Fort Collins**
Emergency Medical Technician, 2015

Colorado State University **GPA:** 3.9 **Fort Collins**
B.S. Psychology, 2014

RESEARCH AND ACHIEVEMENTS

Automatic classification of calcifications in breast mammograms using deep neural network **2018-2019**

- Working under University of Colorado Denver's staff member to code a software program that can take in a mammogram image as input and output the likelihood of the patient having a benign or malignant result. Using Python and a variety of neural networks to build.

First Place at Research and Creative Activities Symposium (RACAS) **2019**

- Automatic classification of calcifications in breast mammograms using deep neural network

Senior Capstone Project **08/2019-current**

- Develop a portable infrasound (20 Hz or below) emitting technology to be used to localize where the infrasound originates from. This project involves designing an infrasound emitter by constructing a rotary subwoofer and developing the circuitry to alter the pulse width modulation of the signal.

EXPERIENCE

Kratos **Denver, CO**
Software Engineer Intern *March 2020 – Present*

Hacienda Colorado **Denver, CO**
Server *May 2017 – March 2020*

Vestas **Windsor, CO**
Wind Turbine Manufacturer *October 2016 – May 2017*

Terumo BCT **Lakewood, CO**
Medical Assembler *November 2015 – October 2016*

College of Engineering and Applied Science
UNIVERSITY OF COLORADO DENVER | ANSCHUTZ MEDICAL CAMPUS

SAM BEBERNES

720-999-4204 |sam.bebernes@ucdenver.edu |www.linkedin/in/sam-bebernes

WHO AM I

Electrical Engineer undergraduate student, self -motivated to learn. Excellent team communication and people skills. Enjoys taking on challenges and is dedicated to engineering a sustainable future.

SKILLS & ABILITIES

- C++/ Python/MATLAB/Verilog
- Arduino prototyping
- SolidWorks/Autodesk Inventor/OnShape
- PSPICE/Quartus
- Oscilloscope/Multimeter
- Quality Control
- Microsoft Office

EXPERIENCE

June 2017-June 2018

Machine Operator , *Wytech Industries*

· Operating CNC Grinder, CNC 3-axis Mill, EDM.

· High Precision Quality Control

· Final Inspections

2015-2017

Machine Operator, *Larson Engineering*

· Operating CNC Mill, Lathe, Drill Press

· Machine maintenance

· Final Inspections

College of Engineering and Applied Science
UNIVERSITY OF COLORADO **DENVER | ANSCHUTZ MEDICAL CAMPUS**

EDUCATION

Jan 2016-Present Electrical Engineering/Minor in Computer Engineering, Denver, CO, ***University of Colorado at Denver***

Relevant coursework: *Circuit Analysis 1-2,Logic Design, Embedded Systems Engineering 1-2, Digital Hardware Design, Energy Conversion, Electronics 1-2, Electromagnetic fields and waves, Power Systems Analysis, Senior Design, Linear Systems Theory, Thermodynamics*

LEADERSHIP

Assistant Little League coach

- Volunteered to help coach summer little league
- Learned leadership skills and how to teach young kids

College of Engineering and Applied Science
UNIVERSITY OF COLORADO DENVER | ANSCHUTZ MEDICAL CAMPUS

NICHOLE ROBERTS

Erie, CO 80516

303-349-4937 | nsrcolorado22@gmail.com

SUMMARY OF QUALIFICATIONS

- Bachelor of Science, Electrical Engineering Major/Computer Engineering Minor; relevant coursework includes; Logic Design, Embedded Systems Engineering 1-2, Circuit Analysis 1-2 , Digital Hardware Design, Engineering Probability and Statistics, Energy Conversion, Electronics 1-2, Electromagnetic Fields and Waves, Thermodynamics, Power Electronics, Senior Design, Linear Systems Theory; Engineering coursework in progress includes: Senior Design 2, Advanced Electromagnetic Fields, Power Systems Analysis, Hardware-Software Interface, Special Topics;
- Programming experience in C code including MATLAB, Verilog and Python
- Academic involvement experience in the society of Women in Engineering attending meetings and interacting with other female engineers
- Successful team and project management/leadership skills in academic environments such as engineering Senior Design Team Leader and other lab related classes
- Technical experience with Microsoft Office, Visio, Arduino programming, MATLAB/Simulink, Spyder(Python) Altera Quartus/Vivado(Verilog), and CAD experience in Inventor and SolidWorks

EDUCATION

University of Colorado Denver, Engineering School, Denver, CO **GPA: 3.2**

Bachelor of Science, Electrical Engineering with Computer Engineering Minor; Expected graduation May 2020;

Legacy High School, Broomfield, CO

Graduated May 2016;

- Letterman in Varsity golf and swimming

Bollman Technical Education Center, Thornton, CO

Graduated May 2016; Letterman in academics

- Relevant course work includes; Introduction to Engineering, Aerospace Engineering, Computer Science

PROFESSIONAL EXPERIENCE

Lockheed Martin, Littleton, CO, June 2019 – Present

RF Engineering Intern

- RF Payload Center of Excellence - EGSE/STE (Electrical Ground Support Equipment/Special Test Equipment)
- Top Secret Clearance
- Independent research on special test equipment LTWTA (Linearized Traveling Wave Tube Amp)
- Program support for OPIR, SBIRS and Capital STE
- Intern Ambassador
- Participated in Preliminary Design and Critical Design Reviews
- Training in Radio Frequency Test Equipment
- Participated in OPIR RF rack design layout and equipment selection

Chick fil A, Thornton, CO, June 2014 – May 2019

Team Leader

- Leadership role required to run shifts, handle finances, and assign tasks/chores
- Excel in customer service, teamwork environment and fast pace work environment

LEADERSHIP AND COMMUNITY SERVICE ACTIVITIES

CU Denver, Electrical Engineering, Senior Design Project, Project Leader, September 2019 – May 2020

- Project goal is to build a portable infrasound (frequencies below 20hz) emitter for the Air Force Research Lab to be used in tactical environments that are GPS denied for locating/communicating purpose
- Responsibilities as project leader include managing project timeline, assigning engineering assignments to team members, primary point of contact with stakeholders, writing reports, assembling preliminary and critical design reviews and technical engineering work/research

CU Denver, Club Sports, Badminton, Captain and Founder, September 2016 – January 2018

- Responsibilities include recruiting new teammates, representing the team at events for CU Denver, coordinating tournaments with the Colorado Badminton association, running practice, coaching and team captain meetings

Bollman Technical Education Center, Women in Engineering, Class Representative, August 2013 – May 2016

- Responsibilities include representing engineering courses at BTEC at career expos and middles schools to encourage younger students to consider going to the technical school, attending Her World conventions allowing females engineers to get together and practice challenging problem-solving skills and demonstrating flight simulators, computer science programs and engineering projects for large groups

Luvin Arms Animal Sanctuary, Volunteer, June 2018

- Responsibilities include caring for a variety of farm animals by supplying food, cleaning stalls, grooming and providing human physical interaction

College of Engineering and Applied Science
UNIVERSITY OF COLORADO DENVER | ANSCHUTZ MEDICAL CAMPUS

Brendan Bauernschmidt
Arvada, CO 80007
brendan.bauernschmidt@ucdenver.edu 720-519-3825

SUMMARY OF QUALIFICATIONS:

- Bachelor of Science, Electrical Engineering undergraduate student (Graduating May 2020); relevant courses: Energy Conversion w/ lab, Power Electronics, Power Systems Analysis w/ lab
- Experience with various Xcel Energy utilized programs such as Synergi, NMS, GIS, EMS Query, DAA Suite.
- Work on different distribution system planning projects such as minimum daytime load data, feeder ratings, phase imbalance study, solar hosting capacity model updates, capacity checks, and writing switch plans.
- Successful team skills in work environments while in the Distribution System Planning and Strategy group.
- Programming experience includes: C, C++, Python, Matlab, and Verilog.
- Successful team and project management skills in academic environments such as engineering and science labs.

EDUCATION:

University of Colorado Denver, Engineering School, Denver, CO, Jan 2018 - Present
- Bachelor of Science, Electrical Engineering; Graduating May 2020
- Minor in Computer Engineering
- 3.583 GPA

Front Range Community College, Westminster, CO, Jan 2016 - Jan 2018
- Switched major from Computer Science to Electrical Engineering

University of Colorado Boulder, Engineering School, Boulder, CO, Aug 2015 - Jan 2016
- Majoring in Computer Science

Ralston Valley High School, Arvada, CO, Aug 2011 - May 2015
- 4-year Varsity letterman in Wrestling
- 4-year letterman in academics
- CHSAA Academic All State First Team
- Ralston Valley Outstanding Academic Athlete

PROFESSIONAL EXPERIENCE:

Xcel Energy Electric Distribution System Planning Intern, Denver, CO, June 2019 – Present
- Work on different system planning projects such as Minimum Daytime Load data, feeder ratings, phase imbalance study, solar hosting capacity model updates
- Experience with various programs such as Synergi, GIS, NMS, EMS Query, DAA Suite

YMCA Youth Councilor, Arvada, CO, July 2018 – June 2019

- Group leadership experience as well as experience working in a fast-paced and team-oriented environment with various schedules and rotations.
- CPR certified.

Fire Inspection Services, Wheat Ridge, CO, June 2014 – June 2018

- Inspected FACP panels and batteries, fire alarm systems, fire sprinkler systems, smoke detectors, duct detectors, fire extinguishers, fire blankets, safety showers.
- Experience working with equipment such as voltmeters, nitrogen tanks, fire extinguishers, and various other inspecting/cleaning equipment.

LEADERSHIP AND COMMUNITY SERVICE:

Assistant Wrestling and Brazilian Jiu-Jitsu Coach

- Helped teach youth wrestling classes at Ralston Valley High School, as well as served as a volunteer assistant coach for Easton Brazilian Jiu-Jitsu youth classes.
- Learned valuable leadership skills as well as how to successfully teach younger children.

Volunteer at Second Chance Thrift Store

- Cleaned the store, sorted items, restocked items, and retrieved items from trucks and from people's donations.

College of Engineering and Applied Science
UNIVERSITY OF COLORADO DENVER | ANSCHUTZ MEDICAL CAMPUS

Ronald Shannon

937.543.2674 Ronald.Shannon@ucdenver

Technical Skills

MS Office, C programming, MATLAB, VHDL, component level troubleshooting of analog and digital control/monitoring systems, Power Distribution

Education

University of Colorado Denver January 2017 – December 2020

Bachelor of Science, Electrical Engineering

US Navy Nuclear Pipeline August 2010 – October 2011

Naval Nuclear Field Electronics Technician Power School
Naval Nuclear Field Electronics Technician A School

Relevant Courses

Linear Systems Theory
Circuit Analysis II
Hardware Software Interface
Electromagnetic Fields

- Instrumentation and Control Equipment
- Embedded Systems Engineering II
- Power Systems Analysis
- Control/Estimation of Batteries and Supercapacitors

Relevant Projects

Electromechanical controls

- worked on CU Denver SpaceX Hyperloop pod entry team with a focus on linear actuated brake systems and Hall Effect wheel speed detection
- Senior Design Rotary Woofer production. Focused on electromechanical actuation for rotary shaft control.

Experience

US Navy 5/10 – 3/15

Enlisted Nuclear field Electronics Technician. Trained to operate, maintain, and troubleshoot nuclear reactor control and monitoring systems. Trained in metallurgical, chemical, radiological, and mechanical facets involved in nuclear and turbine power generation and distribution systems.

Granicus 6/19 – 8/19

Operations analyst intern. Performed end-to-end process mapping for product implementations with a focus on critical path identification. Conducted in depth analysis of product deployments to identify inefficiencies.

Professional Organizations and Other Honors

Tau Beta Pi member since fall of 2019
University of Colorado Denver Dean's List Spring 2017 – present
2013 received good conduct medal for service in U.S. Navy

College of Engineering and Applied Science
UNIVERSITY OF COLORADO DENVER | ANSCHUTZ MEDICAL CAMPUS

Jeff Thomas

Phone 303-552-8286 | Email Jeffrey.Thomas@ucdenver.edu | Denver, CO

Entry Level Electrical Engineer

- Electrical Engineering major with emphasis on RF and power systems.
- Fast-learner that has used several programming languages and design tools.
- Interest in many fields and applications of software and hardware.
- Works well in a team to produce results in a timely manner.

Technical Skills

- Matlab
- Pspice, LTspice
- Mathcad
- FICO
- C Code
- Python
- Verilog
- Arduino

Education

BS Electrical Engineering Graduation Fall 2020
University of Colorado Denver
Major GPA: 3.145

Relevant Coursework

- Electromagnetic Fields
- Advanced Electromagnetic Fields
- Control Systems Analysis
- Power Systems Analysis

Related Projects

Rotary Woofer: Generating Infrasound Aug 2019 – May 2020

- Designed and presented a portable infrasound generating device with my team to students, faculty, and members of the US airforce.
- Achieved a 3-d printed, portable rotary woofer design with a DC motor, and voice coil powered by an Arduino.

Work Experience

3rd Shift Supervisor, Terhorst Mfg., Minot, ND June 1999 – June 2005

- In charge of night shift for an injection molding facility, 13.5 hour shift (40 hours in 3 days)
- Tasks include setup, operation, some repair of injection molding machines, driving forklift, drying of raw materials, palletizing of shipments, and shutdown/lockup of facility for the weekend.
- Knowledge of molded plastics

Merchandise Pickup and Sales, Sears Holding Corp., Aurora, CO June 2006 – March 2012

- Tasks include unloading of freight from semi-trailers, loading large customer purchased merchandise, warehouse organization, sales, sales floor setup/takedown in Tools/Lawn and Garden, and customer service

Forklift Operator, Yellow Freight, Aurora, CO August 2006 – December 2006

- Tasks include driving forklift, loading freight into semi-trailers, adhering to weight and hazmat restrictions, and recoopering of freight

Sales Clerk, Stamm Beverage Co., Denver, CO March 2012 – February 2016

- Tasks include opening/closing of store without supervision, sales, re-stocking, installation and operation of security cameras, and customer service
- Trusted with a key to the building

Associations

- Amatuer Radio License – Federal Communications Commission May 2016