Low-Cost Snowpack Measurement - A Scientific Approach

Final Report
Group 10 - Spring 2021

Team Members:
Rachael Arnold, Lee Evans, David Gedney, Rafael Hernandez
Byron McDanold, Tolulope Odeyeme, John Pelepchan

Table of Contents

Abstract

Snowpack measurement is important data to both scientists and the public. Municipal water supplies, ski resort operators, and climate scientists are just some of the stakeholder parties who rely on quality snowpack data. Currently, the methods for collecting snowpack data are cumbersome, expensive, and do not yield high enough quality or quantity of data.

For this project, our group of engineering students are collaborating with stakeholders at NCAR, the National Center for Atmospheric Research, to develop possible ways to improve snowpack measurement techniques. Numerous potential project paths were discovered ranging from ground sensor development to aerial measurement systems. Following an assessment of budget, expertise, and time available, an approach focusing on the modeling of blowing snow as it pertains to snowpack measurements was selected. A hybrid system that utilizes a low-cost ground tethered aerial drone system to deploy atmospheric sensors for data collection was chosen as the path for the project. Additionally, a camera based particle sensor system was added to this system to collect snow particle flow data to coincide with the meteorological data.

Problem Overview

One of the first questions asked near the beginning of the project was “why is measuring snowpack important?” Initially one might consider skiing and other winter sports as being chiefly concerned with how much snow is available for leisure uses. While recreation and leisure uses are important, there are numerous other important uses for snowpack information. Municipal water supplies rely on snowpack data to estimate available water for the following year. Farmers make crop choices based on available water for irrigation. With climate change becoming a greater concern, scientists desire to model and understand changing snowpack year over year. The stakeholders for snowpack data are numerous and they all would benefit from better and more abundant data.

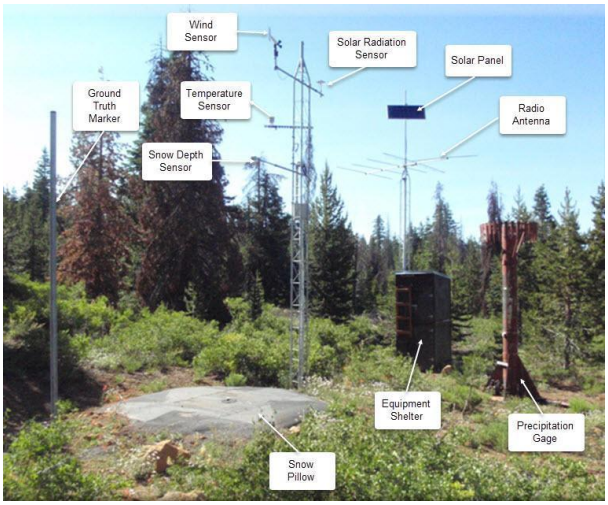

According to the EPA, Colorado’s spring snowpack levels since the 1950’s declined between 20 to 60 percent at most monitoring sites. This is due to both higher temperatures and less precipitation. Lower levels of snowpack mean lower levels of water available for drinking and agriculture, reduction in the length of the ski season, and an increase in pests such as the pine beetle which have decimated large parts of Colorado’s forests in the past. In addition, higher temperatures and lower levels of precipitation, lead to conditions that

increase the amount, size and severity of wildfires. A phenomenon which has been readily apparent this season. When it comes to climate change, large amounts of accurate data are needed to help find the causes of, and solutions to this problem.

Currently snowpack is measured by several different techniques. Ground based sensors called snow pillows (shown at right) measure the water weight of the snow that lays on top of the sensor. These SNOTEL stations are expensive to install and are only deployed in a limited number of locations. Another method is to have personnel travel to snowpack zones and take snow tube measurements. This method is also expensive and limited in data range and additionally puts personnel in hazardous conditions as most snowpack zones are in remote inaccessible regions of high mountains. One of the better techniques for measuring snowpack is aerial flyover lidar measurements. These measurements can map a wide area and, when taken multiple times, be used to determine changes in snowpack levels. Unfortunately, this method is exorbitantly expensive, costing tens of thousands of dollars per data point. The bottom line is that existing techniques for measuring snowpack are deficient and too costly. A low-cost solution is desperately needed.

Snowpack data is most often collected by public agencies like the National Water and Climate Center (NWCC) under the Natural Resources Conservation Service (NRCS) which is an office of the United States Department of Agriculture (USDA). Other local entities like the Colorado Department of Natural Resources (DNR) also take part in data collection. These agencies deploy personnel and equipment to collect and disseminate snowpack data to the public at large. Organizations like the National Center for Atmospheric Research (NCAR) and the National Oceanic and Atmospheric Agency (NOAA) analyze and interpret the data. From the analysis, private companies, municipalities and other end users utilize the data analysis results to make important decisions that relate to available water supplies. Basically it all comes down to data and how we get more of it at a high level of quality.

One proposed method of reducing snowpack measurement costs is to utilize small scale unmanned aerial systems (UAS) or drones in some fashion to collect snowpack data. This direction is the basis of this project.

Discovery - Customer Needs Analysis

One of the first parts of the design process was to perform customer needs analysis. We started with the knowledge that snowpack measurements were important and from there we identified possible interested parties. We contacted and interviewed key stakeholders and compiled their comments about snowpack data, measurement techniques and how drones might be utilized. Stakeholder contact revealed just how expansive and complex the issue of snowpack measurement is.

Another part of the design process was to try and develop hypothetical stakeholders called personas (example shown in figure 1) and hypothetical scenarios for which our project would be important. The desired outcome of these discovery

techniques was that unforeseen issues might be revealed that otherwise might have been missed with a narrower discovery process.

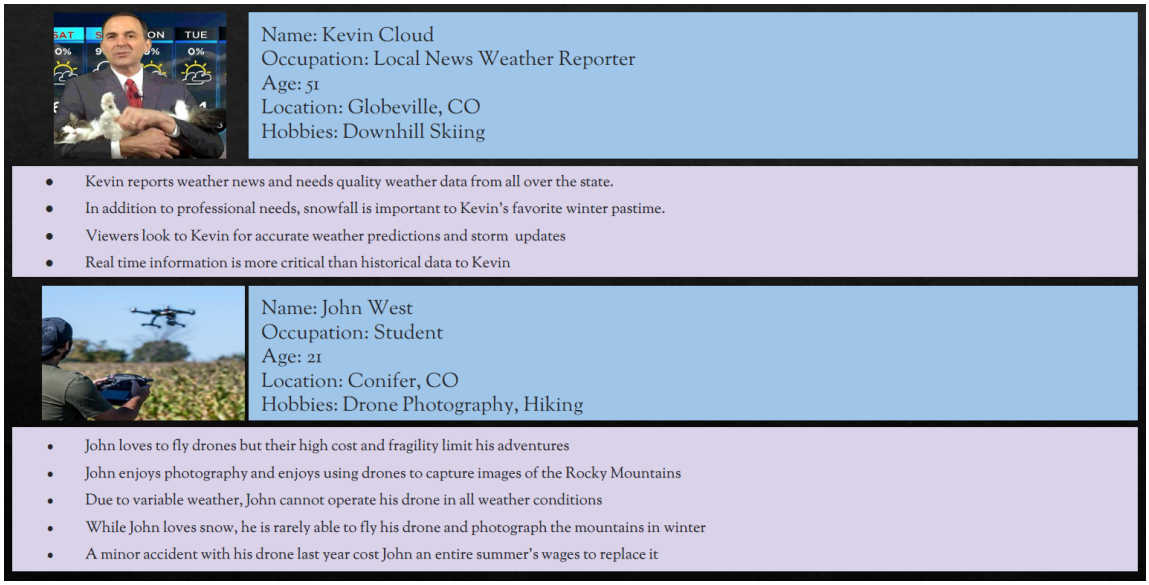

Figure 1: Personas Discovery Technique

Utilizing the results from our stakeholder interviews, our persona creation and scenario brainstorming, we utilized a technique called affinity diagrams to sort the disparate comments and ideas into more general categories. This was a process we undertook using a virtual poster board with digital sticky notes containing the elements. Normally this a process that would be done in person utilizing real sticky notes, but the virtual format was found to be just as effective. The finalized affinity diagram can be seen in figure 3 below. Its contents are also listed here for clarity.

<u>Extreme Conditions</u>

- Ability to fly in snow or blizzard conditions
- Ability to adapt to sudden changes in wind speed or direction
- Ability to fly in high wind conditions
- Able to function in a variety of precipitation conditions
- Electronics stable under extreme temperature variations
- Mechanicals stable under extreme temperature variations
- Hardened against icing
- Able to adapt and respond to hardware and software failures

<u>Abilities</u>

- Able to accommodate a variety of payload options (sensors etc)
- Wind speed and direction sensors
- Accelerometer and drop sensors
- Temperature, pressure, humidity, and other weather-related sensors
- Automated dispatching and navigation
- Communication loss protocol

<u>Data Needs</u>

- Real time data
- Able to maintain position for optimal data collection
- Effective data transmission and retrieval
- Live data stream

- Accurate data
- Aerial photography

<u>Reliability / Durability</u>

- High reliability
- Ability to operate in remote locations
- Ability to withstand impacts
- Resistant to the elements
- Durable enough for daily use
- Long battery life

<u>Cost</u>

- Low cost (always!)
- Different specification UAS systems for different payload and use needs
- Few measurements vs many measurements
- Lower altitude use vs high altitude use
- Grouping of similar measurement payload packages

We found that a few categories could envelop most of the comments and insights we gained from our interviews as well as our personas and scenarios process. For example, one of the driving forces for interest in this project is the cost. Some scenarios and personas showed us that more updates about the state of some watershed was of interest to governments and private entities but the cost of running these measurements was too high to justify collecting additional data.

Another category that developed was that of extreme weather conditions. For example, measuring blowing snow is one challenge, but doing so during extreme conditions is something that is difficult to do. This issue came up again and again during the interview process. Other extreme weather issues arose like devices physically freezing, electronics failures caused by extreme cold or thermal cycling.

Still another category was that of the data needs. Onboard storage is important, but many expressed a desire to see the data update in real time and this was an issue that had a myriad of reasons for failing, such as bad weather, or when a remote system loses line of sight to a base station, or when a failure causes a drone to be lost in an area where it would be difficult or expensive to recover. The affinity diagram shows the categories we were able to develop to encapsulate the expressed and expected needs of potential customers.

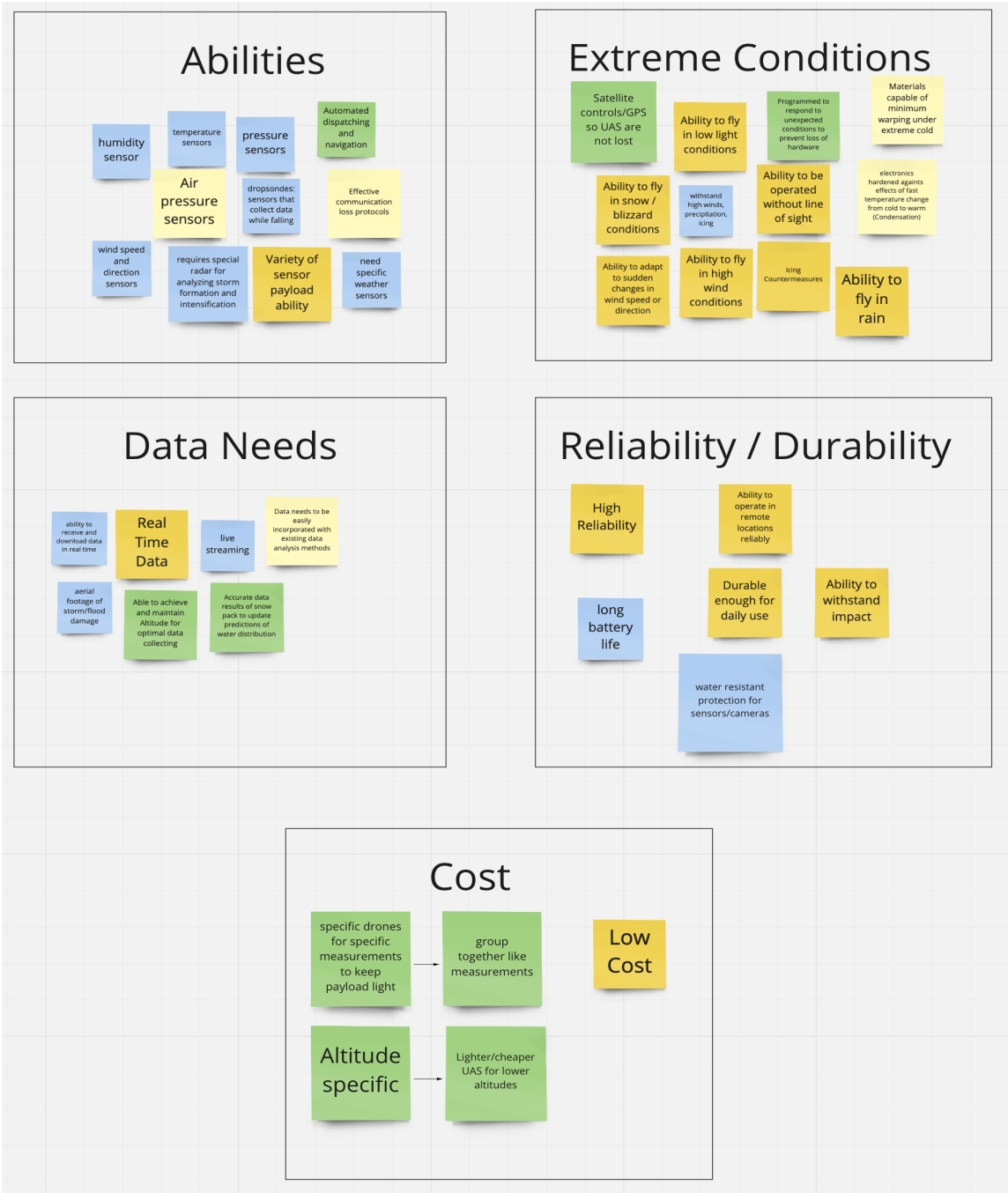

Figure 3: Discovery - Affinity Diagram

Additional Discovery Methods

Another method used in the discovery phase of the project was creating a journey map shown below in figure 4. To create the journey map, the product was approached from the customer's point of view. An activity diagram was created that represented the activities a customer would undertake while working with the drone.

This included but was not limited to actions such as comparing different drones, learning the drone functions, unpackaging the drone, and receiving data.

Touchpoints, channels, and emotions were added to convert the activity diagram into a journey map. Touchpoints were important moments when the customer was interacting with the drone and were represented by a pointing finger. Touchpoints on our map included flying the drone, repairing the drone, and recovering a crashed drone. Emotions were represented by emoticons and were placed at moments where the user would have an emotional experience interacting with the product. For example, a sad emoticon showed the user's feelings about a crashed drone. Channels were placed where the customer was making an important decision regarding the product, so one was placed on the journey map where the customer was comparing and choosing a drone. This technique revealed that creating a quality user experience would be an important part of the final product in this project.

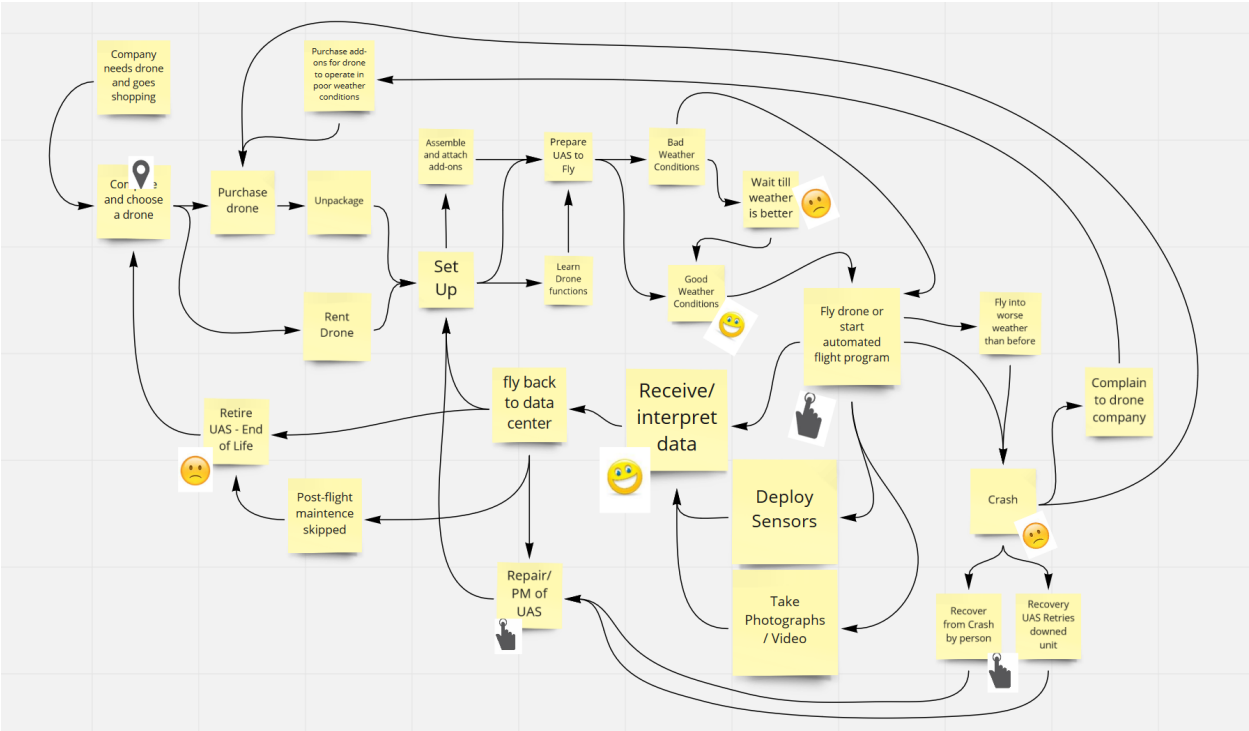

Figure 4: Journey Map Design Method

For the functional decomposition portion of our project, shown in figure 5, rather than considering things from the customer perspective, the functions that the drone itself would be required to accomplish were considered. This included inputs and detection of dangers like wind and icing for drone safety, meteorological measurements such as snow depth, temperature and humidity, the ability to react to surroundings including obstacles and wind. Additionally, the system would need a method of outputting the data it collects. Aside from these technical functions, the drone would also need to adhere to any regulations put in place by the FAA or other government agencies.

Figure 5: Functional Decomposition Design Method

Ideation Process

Some of the concept ideation methods employed had the team approach problems from unusual perspectives or using exotic techniques. The 6-3-5 method had each team member make a series of drawings representing different design concepts. After a certain amount of time, the drawings were traded amongst the team to make edits. The drawings were then traded again for further editing. There was no discussion between team members throughout the process. An example of the results of this exercise is shown in figure 6. The premise of the 6-3-5 technique was that drawing activates different parts of the brain than talking or writing. This would suggest that drawing ideas could allow for previously unconsidered solutions. Although somewhat chaotic and messy, the exercise did provide some beneficial results regarding details of the tether system.

Not all the ideation methods proved to be successful. In the design by analogy method, words and phrases related to our project were submitted to a website called asknature.org. The site returned articles on natural phenomena analogous to the entered query. For example, a search on de-icing brought up an article regarding tree frogs that had a porous outer layer of skin with a natural antifreeze beneath. If ice started to form on the frog, it would naturally expand into the pores and melt immediately. While this was certainly an interesting prospect, it was decided that the concept fell outside of the team's area of experience as mechanical or electrical engineering students and might be a solution more suited to a team of materials scientists.

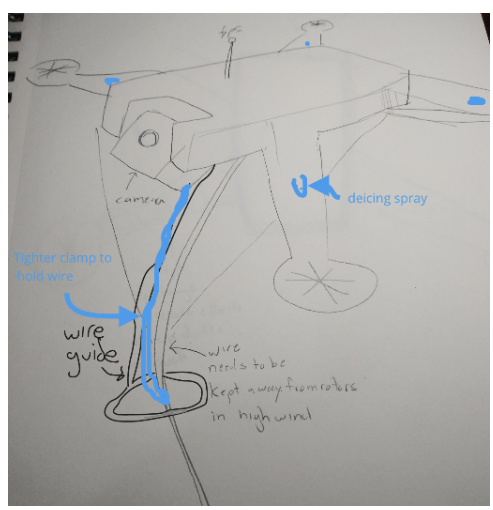

Figure 6: 6-3-5 Exercise

The most successful of all the ideation methods was the mind map. Figure 7 shows the entire mind map, while figure 8 displays an easier to read breakdown of one section of the map. To begin the construction of the mind map, each member of the team brainstormed separately and came up with ways to solve the problem statement. These ideas were then combined into the mind map and from there, more specific solutions were added. The ends of each branch of the map are the specific solutions found using this method. Figure 8 demonstrates how the concepts become more specific as one moves outward along a branch. For example, beginning with the overall problem of hardening a drone for harsh weather, one problem is icing. Of the multiple ways to approach that problem, one is through electromechanical means. Following this branch to one of its multiple conclusions yields the specific solution of using a heated wire scraper to de-ice the drone. The mind map method was successful in providing a large quantity of possible solutions to our problem.

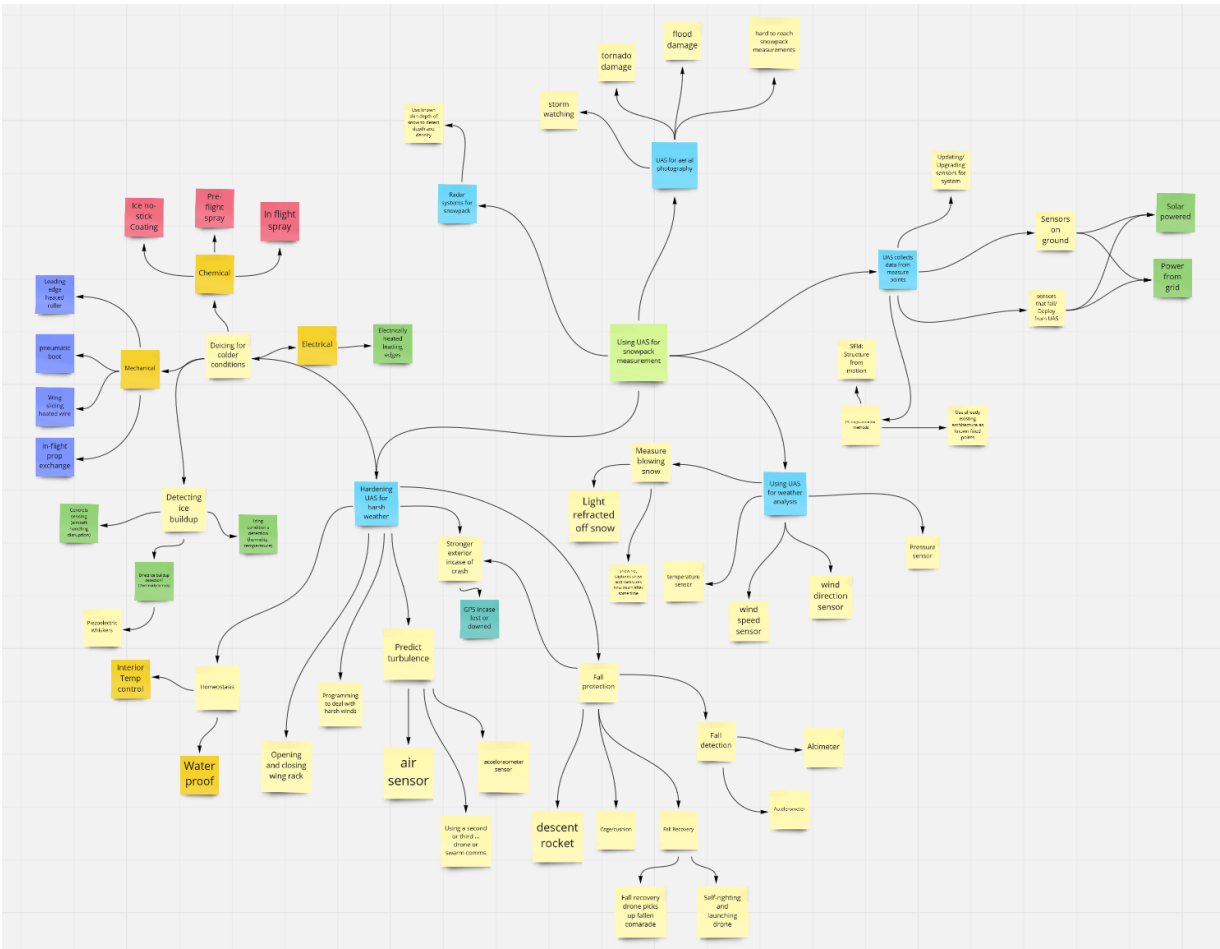

Figure 7: Mind Map Ideation Method

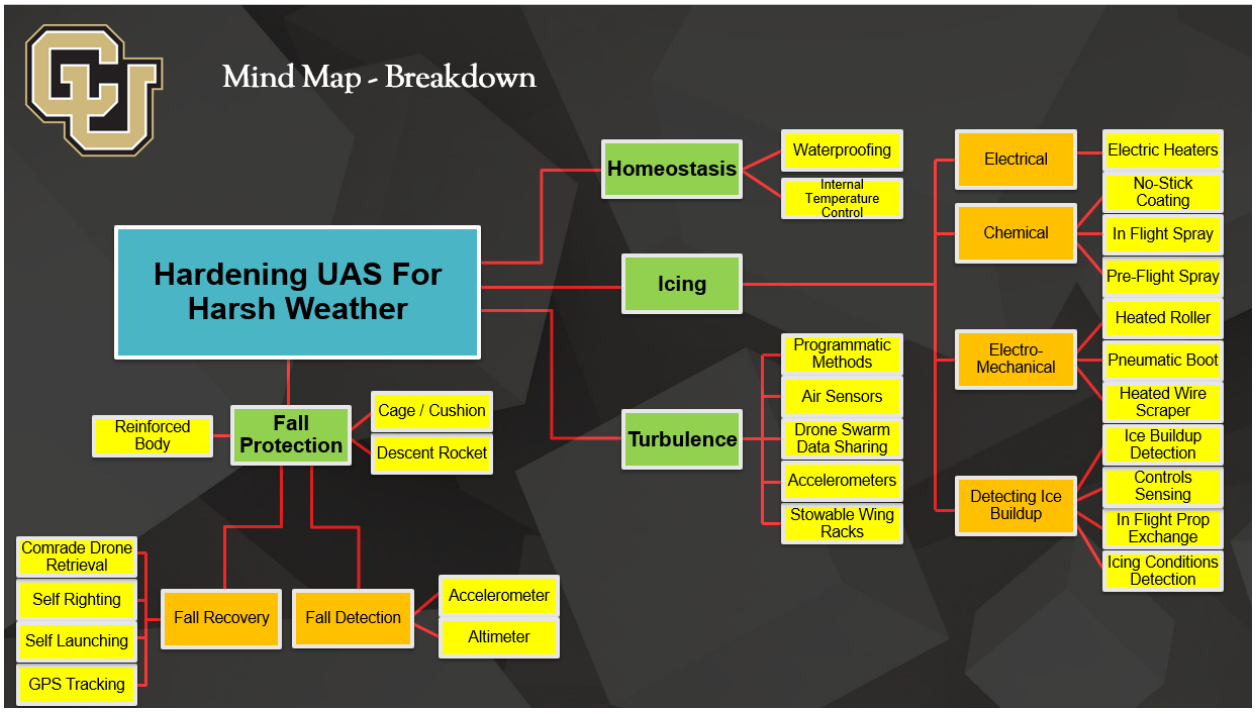

Figure 8: Mind Map - Breakdown

Although multiple methods were used in the ideation of design concepts. One of the simplest yet most useful techniques was conducting background research. Through this process it was discovered that tethered drones, although very expensive, were already in use by the military. If innovation was the goal, more than just tethering a drone would be required. The system would need to be more economical or additional functions would need to be added. Background research was also carried out regarding current snowpack and blowing snow data gathering techniques. Becoming familiar with what is already being done in the field was important to ensure that the solutions being considered were novel and provided inspiration by uncovering ideas that could be expanded upon.

Concept Generation

Upon initial discussions with stakeholders, it was revealed that the problem of improving snowpack measurement is significant and can take many paths. The problem of snowpack measurement was initially presented to us with a possible solution: utilize unmanned aerial systems to measure snowpack. While this sounded simple enough in theory, there were some practical and budgetary issues with this project direction. This idea required the use of medium sized drones with expensive instrumentation. While this project presented some mechanical and electrical engineering challenges and had the potential to yield significant benefits if successful. However, the high prototyping cost and concerns over larger drone licensing made this direction less appealing. Through our discovery phase we considered multiple different directions the project could take and several different needs that those different directions might require. Ultimately, we narrowed to a set of five possible project

directions. We considered the pros and cons of each including elements such as budget, technical expertise, personal interest, and feasibility. The five potential project directions are listed below with brief descriptions.

Path 1: UAS Hardening

One significant concern with snowpack measurements is the environment where snowpack tends to form. Remote high mountain regions with unpredictable and sometimes extreme winter weather is not a friendly environment for sensitive electronics and certainly not airborne devices. One simple direction considered was to develop improvements to small scale unmanned aerial systems to better withstand operation in extreme locations and harsh winter weather conditions.

Pros:

- UAS Work – Of personal interest to many in the group
- Aerodynamic Analysis – Mechanical engineering opportunity
- Possible Partnership – A stakeholder indicated the possibility of a commercial partner that might be interested in such a project
- Test Site Possibility – NCAR stakeholders indicated the potential use of a snow simulation test chamber at their facility

Cons:

- Electrical Engineering – No significant electrical engineering problems were identified with this path. Considering our group is two thirds comprised of electrical engineering students, this would present an academic challenge
- Costly to Prototype – Considering the limited funds available, even a single failed drone flight could ground the entire project with no alternative pathways

Path 2: Atmospheric Modeling

This direction involved developing a UAS based system for measuring atmospheric data at low altitudes for modeling purposes. The idea here was to mount sensors to low altitude drones to collect data.

Pros:

- UAS Work – Of personal interest to many in the group
- Aerodynamic Analysis – Mechanical engineering opportunity
- Collaboration – Potential collaboration opportunity with Metro State
- Low Altitude – Low altitude nature of measurements reduces regulatory restrictions that may be present with other design paths

Cons:

- Costly to Prototype – As with the previous path, a single failed drone flight might end the entire project due to budgetary constraints
- Weatherproofing – Drone systems would still require weatherproofing which could be an entire project on its own
- Software Modeling – This project might be better suited for a team that includes computer science expertise

Path 3: Ground Sensor Development

Another path considered was the development of a low-cost ground-based SNOTEL type sensor system. At low cost, a novel sensor design could be deployed at scale which would increase the overall amount of data being collected.

Pros:

- Mechanical Design – Opportunities for mechanical engineering
- Sensor Development – Opportunities for electrical engineering
- Small Scale – Prototyping can be done in a laboratory or shop
- Lower Cost – Small scale prototyping works well within budgetary constraints

Cons:

- No UAS Work – Most on the team had significant interest in working with UAS systems specifically so the prospect of working on a ground-based sensor was less appealing

Path 4: Snow Sensing Method 1

This path included developing a technique to detect and measure blowing snow by means of a data model utilizing meteorological data collected in a vertical column at multiple altitudes and in multiple places. This data and model can be used to determine the nature of snow blowing from one snowpack to another versus fresh falling snow.

Pros:

- Mechanical Design – Opportunities for mechanical engineering
- Sensor Development – Opportunities for electrical engineering
- Small Scale – Prototyping can be done in a laboratory or shop
- Lower Cost – Small scale prototyping works well within budgetary constraints

Cons:

- No UAS Work – Most on the team had significant interest in working with UAS systems specifically so the prospect of working on a ground-based sensor was less appealing

Path 5: Snow Sensing Method 2

This path considered developing a technique to measure snow water equivalent in a more automated way than is currently used. Snow water equivalent is a more important measurement than just snow depth as it reveals the water content of that snow. Current techniques for measuring snow water equivalent are limited in scale and expensive in deployment so there is a great opportunity to develop a low cost technique.

Pros:

- Mechanical Design – Opportunities for mechanical engineering
- Sensor Development – Opportunities for electrical engineering
- Small Scale – Prototyping can be done in a laboratory or shop
- Lower Cost – Small scale prototyping works well within budgetary constraints

Cons:

- No UAS Work – Most on the team had significant interest in working with UAS systems specifically so the prospect of working on a ground-based sensor was less appealing

Down-selection and Final Design Choice

In choosing a final project direction we utilized the “Real, Win, Worth” process. This involved assigning values to each project design with regard to three primary categories: Real, meaning the technology or technique exists or can be developed within the confines of existing technology. Win describes how well the design would accomplish the desired outcome. Worth describes the value that the design would offer to stakeholders or the public if successful. In addition to these three categories, we also considered a fourth category, the wow factor. We wanted a project that did not just rehash existing technology or re-invent something already accomplished. It was our design to do something novel and different.

The results of the real, win, worth, process was that all the design paths would be viable in one way or another, but none rose to the top. As a result of adding a wow-factor requirement, we ended up selecting our final project direction as a hybrid of different parts of design paths. We took interest in the data collection side that was mentioned in the snow sensing 1 path, but we also desired to utilize drones in our design. While both paths had strong real, win and worth to them, we needed a wow factor that none of our design paths offered. The wow factor came in the form of utilizing a tether cable with our drone system to both offer additional control dynamics but also solve some of the issues concerning operating drones in harsh weather conditions. Tethered drone systems have been produced and are commercially available. These systems have not been used for climate related research and they are exorbitantly expensive.

Our goal is to design a tethered drone system for data collection that is significantly less costly. Partway through the design and prototyping process, an additional goal was added to the system. Following some stakeholder collaboration, the concept of adding a wind driven particle detection system was added. Integrating this new concept into the existing concept took the project concept above and beyond the original wow-factor desired.

Design Requirements

Our original project requirements were to investigate using UAS (Unmanned Aerial Systems) to facilitate low-cost snowpack measurements. This could take many different forms. The first phase of the work would be to do a thorough stakeholder analysis to determine a suite of possible areas where UAS might be used. This would entail background research into the current methods and technology for snowpack measurement as well as surveys and interviews with users and experts in the field. Observing the current snowpack measurement operations would also provide additional insight. Relatively low cost (~$2K) commercial UAS are available that have reasonable (2-4 lbs) payloads. This is sufficient for many potential sensors.

After investigating our possible options and completing our customer needs analysis we determined that the most important aspects of the project would include keeping it low cost, getting specific measurements using sensors and keeping the system secure and protected from the harsh weather conditions. We decided to try and stay with low cost by obtaining a low-cost drone kit and assembling it ourselves. This also includes programming the drone ourselves and creating our own sensor cart that would take measurements. With the addition of the particle sensing unit, the focus of the project is more on the sensor and deployment side and less so on the operation in harsh weather. As a result, some of our performance modes have changed since fall.

Performance Modes:

- Drone can successfully fly to a fixed altitude and hold position
- Drone can maintain position and support load long enough to collect data
- Drone can take off and land without damage to self or attached sensor package

Failure Modes:

- Drone fails to stay airborne in moderate weather conditions
- Drone fails to stay airborne long enough to collect sufficient data
- Drone fails to adequately lift sensor package to desired altitude
- Tether cable fails to hold load securely
- Sensor equipment failing to operate autonomously
- Sensor equipment failing to operate long enough to collect sufficient data

Analysis, Simulation and Prototyping Results

Subsystem 1: Hexacopter Control System

Purpose:

This subsystem is intended to provide the control mechanism for the sensor package. The drone provides an anchor point in the sky and the tether cable provides the means to move the sensor package to the desired elevation. Each sub-component is described in detail below.

Subsystem 1a: Hexacopter

The first prototyping direction included assembling and testing a hexacopter drone that was purchased from Amazon. There were multiple options that we were able to narrow down by taking into consideration the mechanical capabilities as well as the cost. Some of the tasks for this path involve testing the stock control system of the drone, designing the pulley mount system, and the behavior of the drone with and without a tether. This was a mix of electrical work and mechanical work when it came to the building of the drone and verifying mounting point options for the tether and the pulley. This prototyping direction also involves investigating the power use and battery life for the drone itself.

We ordered a low cost hexacopter and upon receipt we assembled and powered it on. After initial test flights we determined that two of the motors were malfunctioning and preventing the device from flying. Further troubleshooting was done over winter break and we were able to continue our testing with the hexacopter. This also included creating a safety checklist, registering the drone with the FAA and getting UAS certified (see appendix *C*).

Figure 9: Hexacopter Drone Assembled

We have found some different control options online however according to the manufacturers most controllers are locked. There are even better commercial options available online that are built for harsh conditions however they are not low cost but are

worth it if they can achieve what we are looking for. These options even include some that are designed and built with a tethered mobile base station. The sponsors were able to contribute to the project and purchase a Pixhawk 4 control system that increased our drone's abilities.

We were able to get our low cost hexacopter up and running, however the pulley mount could not attach to the bottom plate of the drone because it also acts as a circuit board. This led the team to design an attachable plate that could carry the pulley, the damping system, and the legs of the drone. A mounting for the tethered system had to be manufactured for the drone. This pulley plate will allow the team to attach the pulley and the kevlar rope. Two designs of this plate have been drafted. The first design was for aluminum 6061 machining. This design is a duplicate of the bottom plate of the drone with holes to attach the landing gear that is also being designed and a pulley.

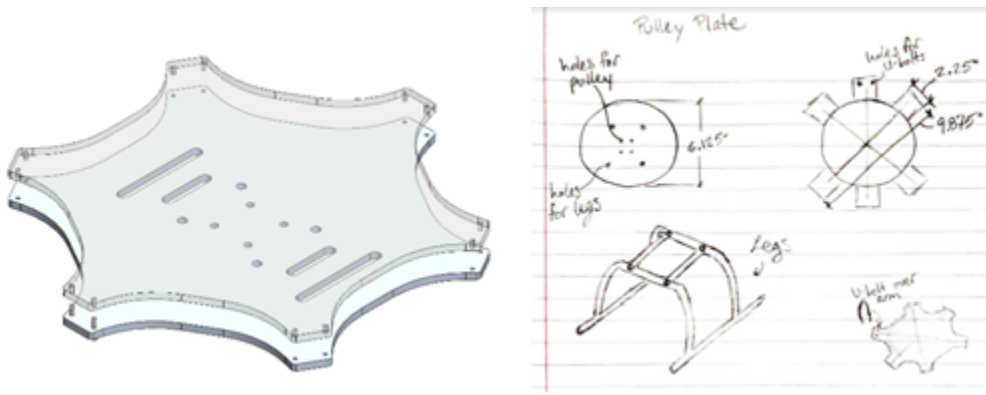

Figure 10: Design 1 of Pulley Plate in Assembly including Bottom Plate of Drone and M2.5 x 0.45 mm screws

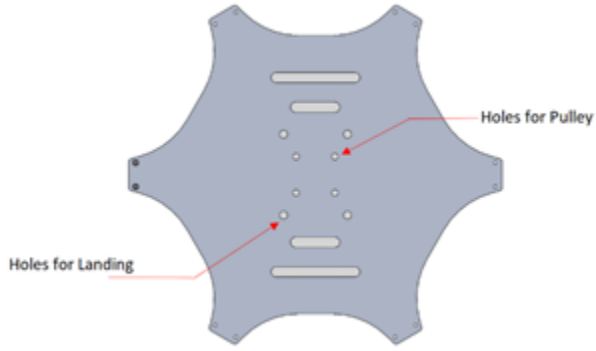

Figure 11: Additional Details of Pulley Plate

The second design was for additive manufacturing. This design also aligns with the holes that hold the arms of the hexacopter drone. This design would be printed in either PLA or ABS plastic.

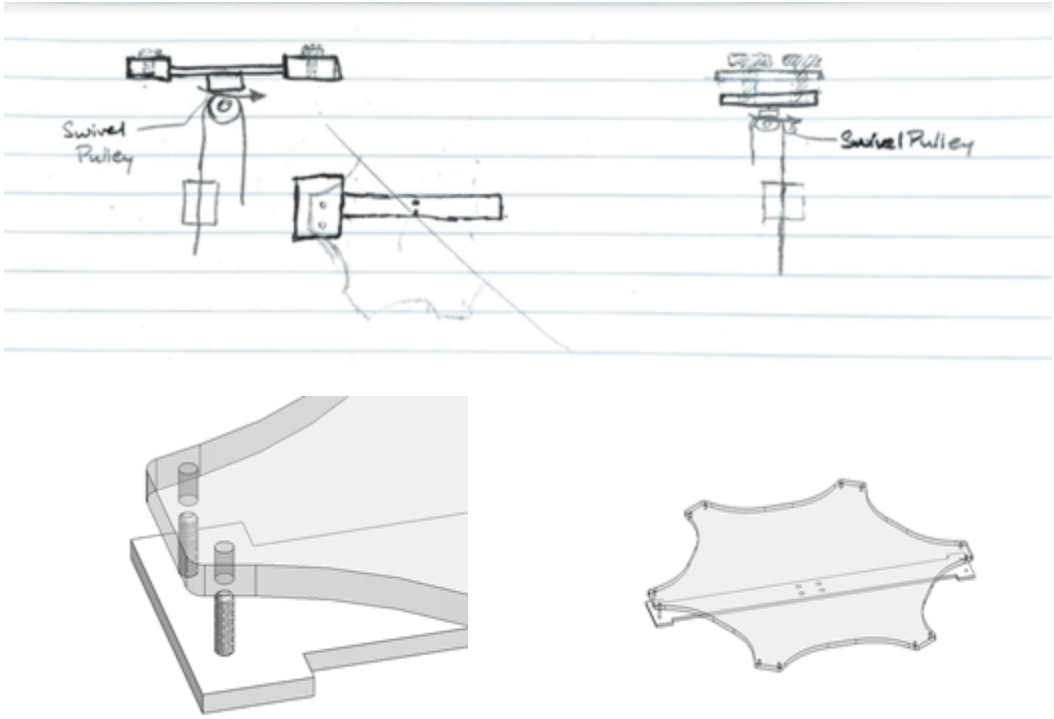

Figure *12*: Design 2 of the Pulley for Additive Manufacturing

After review, the first design of the plate was the most viable route to start prototyping. The lightweight factor and anti-corrosive properties of aluminum 6061 would benefit the drone in wet, cold winter conditions. While a 3D printed part would be lightweight, the reduced strength of the material could potentially fail and leave cracks in the plastic component. These cracks could further damage other components of the drone.

There were multiple damping systems that were considered for the tether cable attachment. The best option that was chosen was Alpha Gel BG-7 spring dampers as shown in figure *14.* They are rated at 3.2-6.4 kg loading for a set of four, however they must be used in compression rather than tension. This required the team to design an additional compressive plate attachment as shown in the figures below.

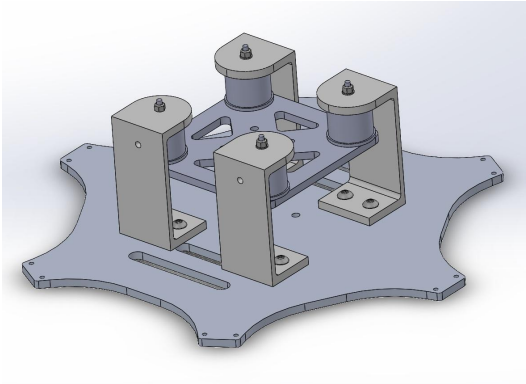

Figure 13: Design of the pulley plate and the compressive plate attachment.

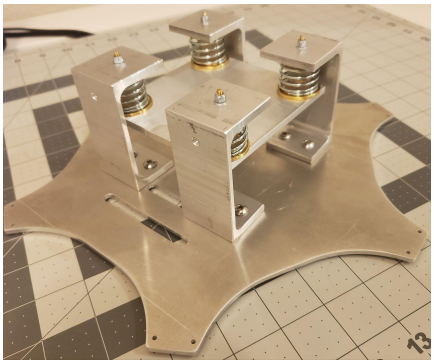

Figure 14: Machined pulley plate and compressive plate attachment.

Subsystem 1b: Pulley Mounting & Design

An additional part of this system will be a pulley mounted to the drone. This pulley needs to be capable of rotating completely while still managing the tension loads placed upon it. Some preliminary design work was completed on a pulley mount system that utilizes a thrust bearing to allow for rotation in a state of tension. A CAD model of this proposed design for future construction is shown in figure *15*.

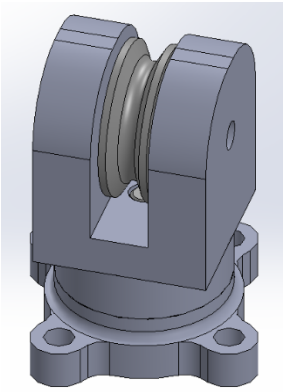

Figure 15: First proposed drone pulley mount

The team realized that the original proposed design for the pulley mount was out of our capabilities. The pulley mount designed in figure 16 was the chosen design.

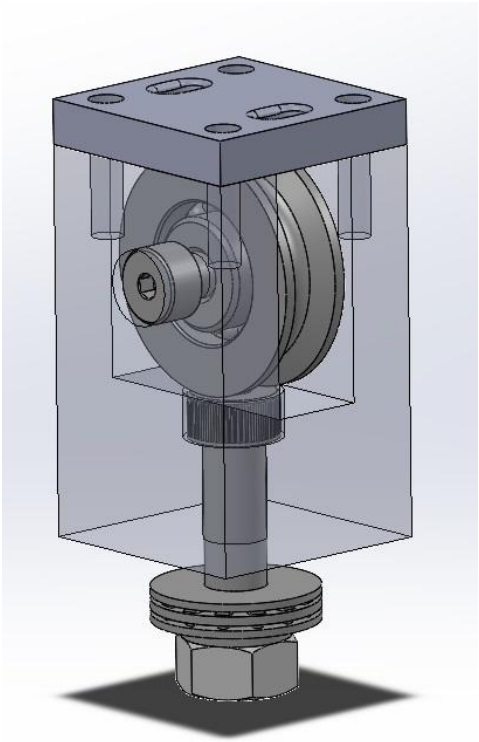

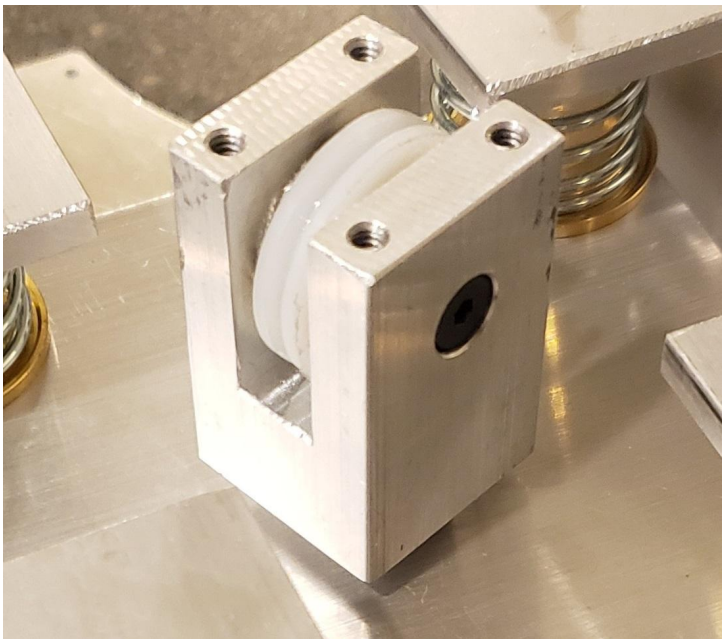

Figure 16: Final design of pulley mount. *Figure 17: Final machined pulley mount.*

For the final pulley system (see figure 17), we used a 25 mm nylon exterior with a steel-bearing interior and the bearing is graded for 400 newtons. The body of the pulley system was machined out of aluminum 6061. A pulley axle was made using a shoulder bolt and washers. A full freedom of rotation was then made possible by the thrust bearing while a nut locks the system around the dampener mount. Finally, a 3D printed cap for the pulley is attached to the 6061 body. This cap allows for the cord to move up and down the pulley without slipping.

Subsystem 1c: Tether Cable System

Of as much importance as the sensor cart, the cable control motor subsystem is critical for both the positioning of the sensor cart and controlling the drone. Originally, two motors would be utilized to reel tether cable in or out to control both the cable cart position and the allowable flying height of the drone. Depending on which motor you run and what direction, the tether cable will either extend, retract, or stay the same length but move the sensor cart. For this prototype, two REV HD hex motors with configurable planetary gearboxes and built in encoders were acquired. Additionally, two SPARK mini motor controllers were acquired. A custom code library was developed to provide an interface between an Aurduino and the two motors and motor encoders controllers. The benchtop testing of the two motors with the Arduino is shown below in figure 18.

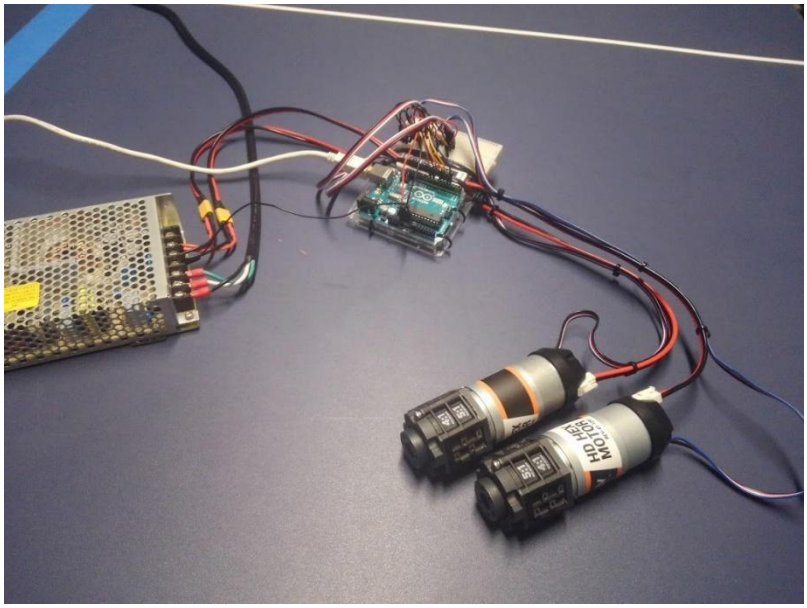

Figure 18: Motor Test System

The interface with the Arduino and SPARK mini controllers proved successful and demonstrated independent control of both motors with precise positional feedback. If we were not limited by budget and time, this control technique would have been modified to control the tether cable via reels as needed, but the initial goal of confirming that this motor and control set up will work was satisfied. The original design for the complete system is shown below in figure 19.

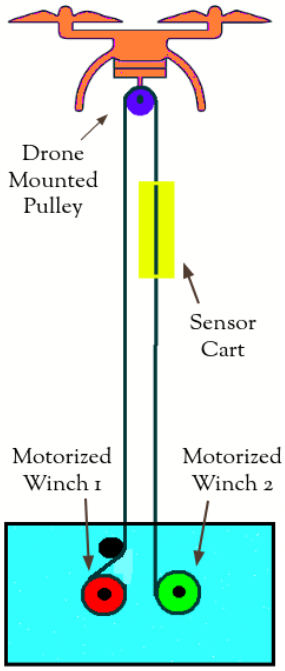

Figure 19: Original Complete System Model

Due to time and budget constraints, the tether cable system could not be automated like we originally had hoped. Instead, the system shown in figure 20 had to be implemented. The cord we used for the tether is a 1 mm diameter cord made of Kevlar material rated for 100 pounds; it is very lightweight and flexible. Our tether cable system is similar to that of a flagpole. One spool has the cord fixed and the other is allowed to be moved freely to adjust the height of the sensor cart that is attached. Approximately 100 ft of cord material is used when the drone is 10 meters high. The spools are wire spools repurposed to echo our original design of an automated motor system with controlled reels.

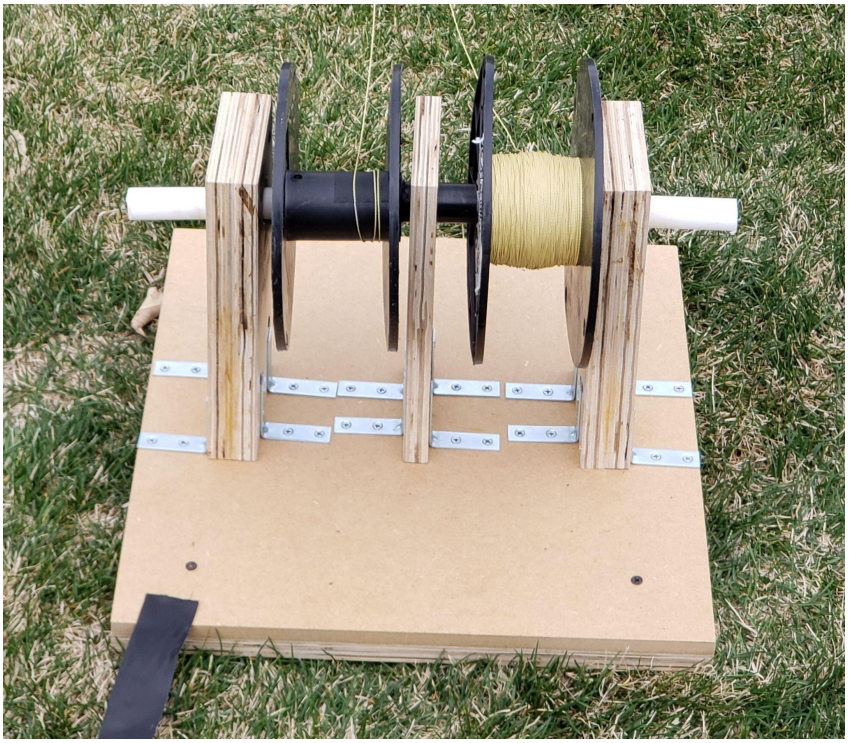

Figure 20: Improvised tether cable system.

Subsystem 1d: Landing Gear

With the pulley and suspension systems constructed, the final components required were some replacement landing gear pieces as the stock units that came with the drone were no longer usable in this new design. Some new legs were drawn in Solidworks and 3D printed. The design of these was intended to be both lightweight and also universal meaning that a single part was used for all four legs. The model of these legs is shown below in figure 21. These legs were bolted to the suspension mount pieces. This is shown in the final 3D model of drone modifications in figure 22.

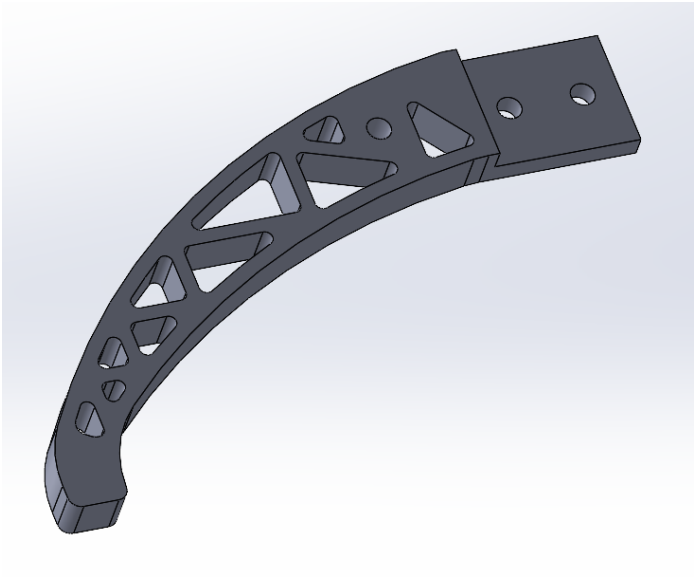

Figure 21: Lander Foot Model

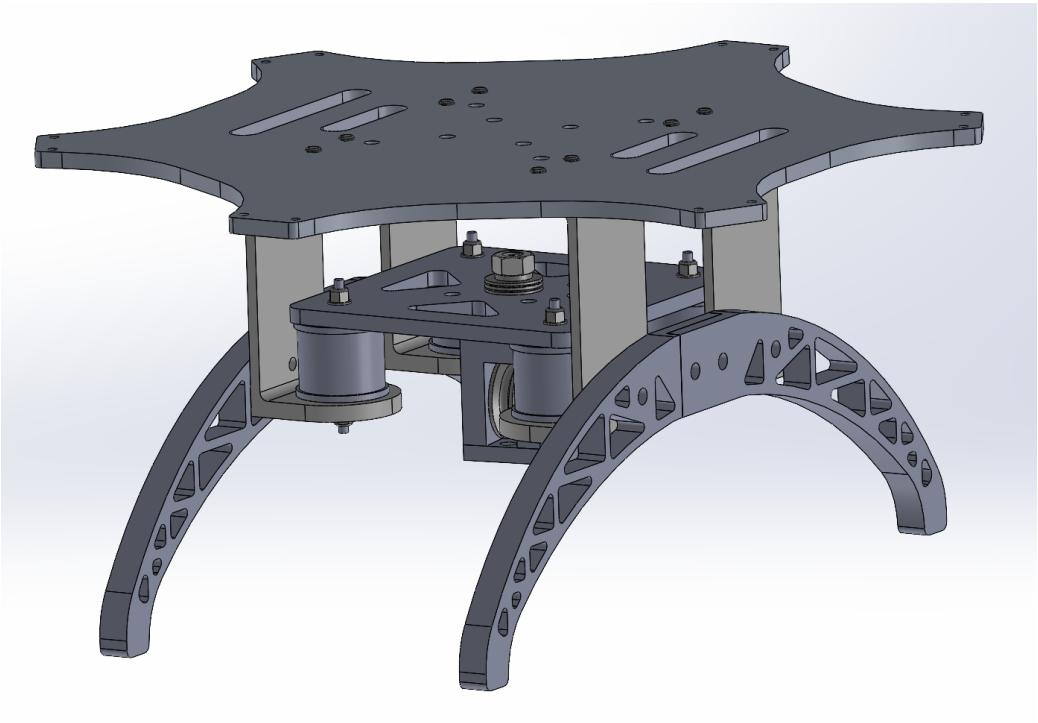

Figure 22: Complete Drone Modification Model

With all the components manufactured, the final drone assembly was complete and ready for testing. The final function drone with full suspension and pulley system can be seen below in figure 23.

Figure 23: Completed Drone System

Test flights were conducted using the fully assembled drone with a retrofitted Pixhawk 4 control system. The addition of a radio downlink kit enabled remote control of the drone from a computer rather than a conventional hand held controller. Utilizing Ardupilot Mission Planner software, the drone unit was able to be programmed with a specific flightpath. The software allows for settings such as altitude, GPS position, flight time and flight speed. For this project, our goal was to have the drone take off in a vertical direction to a specified altitude and hold position. In this manner, the drone acts as a fixed point in the sky for deploying our sensor package system. Test flights were conducted at various altitude set points from 5m up to 20m to verify the capabilities of the system. A screenshot of the Mission Planner software is shown below in figure 24.

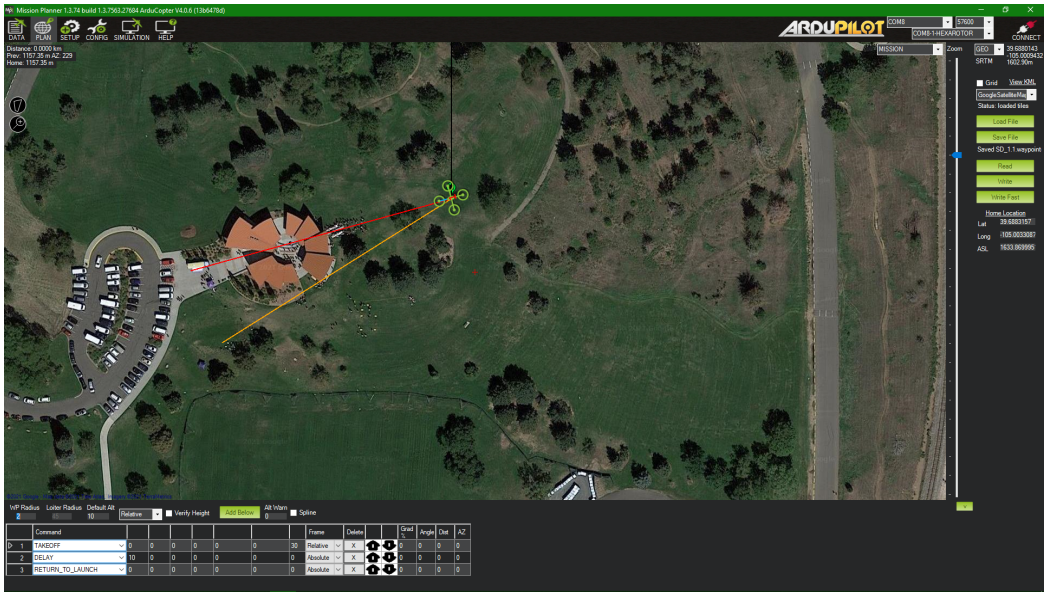

Figure 24: Mission Planner Software

One final concern with this subsystem was flight time. Drone motors are high current brushless motors that can draw upwards of 10A of current. While the batteries in use with these systems can supply nearly 100A of current, the overall capacity is limited. As a result the flight times on these systems is severely curtailed by the size of the batteries installed. For our drone a 4400 mAh battery was installed. At the recommended 50% average load, this would result in a flight time around 8.8 minutes. Real time tests showed actual flight times around 8 minutes. A more detailed table of these computations can be found in the power analysis section later in this report.

Overall, the results of testing this subsystem have been successful. The drone flights have been stable, predictable and reliable. This subsystem has proven fully functional on its own and is ready for integration into the larger system package.

Subsystem 2: Sensor Package

Purpose:

The heart of our tethered drone data collection system is a sensor cart that rides up and down the tether cable that connects to the drone in flight. The goal here was to design a package that can house an Arduino board with data logger attachment, a power supply, and any desired sensors. To this end some different techniques were considered and drawn in Solidworks.

Subsystem 2a: Deployment System

The first prototype design, shown in figure 25 below, was 3D printed and test assembled. Assembled unit is shown in figure 26.

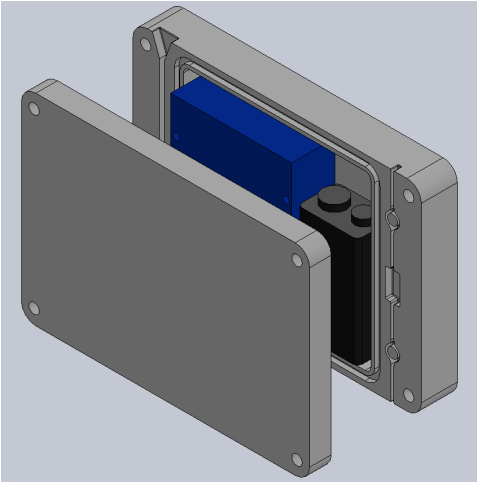

Figure 25: 3D CAD Model of Sensor Cart

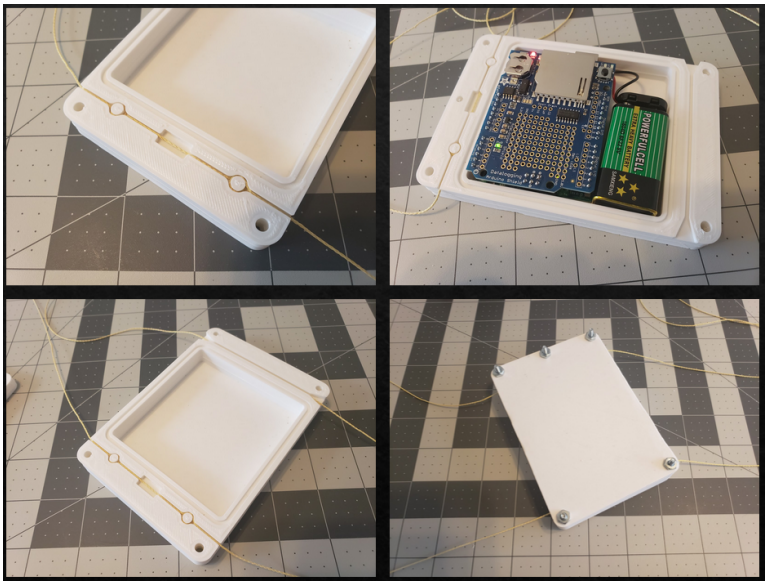

Figure 26: 3D Printed Sensor Cart Prototype

Two different types of cable attachment were tested with this design. One utilizes two posts molded into the cable cart and relies on the friction of the cable wrapped around it to hold the cable in place. This design alone was insufficient to hold the cable to the cart. A second design was also tested in this prototype and involved a molded clamp. When the cart is closed, the two halves of the clamp restrict the cable to a 0.010” space. This proved to be a much better clamping method but still requires more testing to see what the limits of this connection method are.

Once the tether cable was attached, the system was tested using a fixed pulley mounted near the ceiling of a room. With the tether cable fixed to one side of the cart and allowed to slide through the other side, the sensor cart moved easily up and down the tether cable by pulling on either side of the tether cord. This action will ultimately be accomplished using two position feedback motors. Initially a 100 lb tension rated Kevlar cable was used to verify the feasibility of the design. Ultimately, an analysis of the expected cable tension will be completed to ensure a proper cable sizing and material is selected.

The sensor cart includes a cavity for installing the Arduino and power supply and facilitates the installation of an O-ring for sealing out moisture. While this design works in theory, the cavity was not quite large enough to completely fit the Arduino with datalogger attachment. The design method is sound but will require some dimensional adjustment to achieve the project goals.

Some successes of this prototype include:

- Cable attachment mechanism works as intended
- Tether cable moves sensor cart up and down as intended
- Lightweight (6.5g including Arduino and power supply

Some inadequacies of this prototype include:

- Insufficient cavity size to house Arduino with datalogger
- Cable grip not as tight as desired
- Possible cable twisting issues (likely to be resolved with pulley mount design at drone)

While the initial prototype design was a close fit to the design requirements, the addition of the new particle sensor unit in addition to the meteorological sensors required a full redesign of this component. The new system needed to not only house the Arduino sensor package with power supply but also provide a mounting platform for the weathervane / windsock design of the particle sensor unit described later in this report. To accommodate these design needs, a new model was created in Solidworks. This design included four components. This new design utilizes a similar tether cord clamping mechanism as the first design but does not use the post friction method. Rather than a single pass of the cord through the clamp, this design passes the tether cord through the clamping area three times and additionally accommodates two

fasteners directly over the clamping area. The main body of this design has two such clamping areas while the secondary part only has one. A 3D model of this design is shown below in figures 27 through 30.

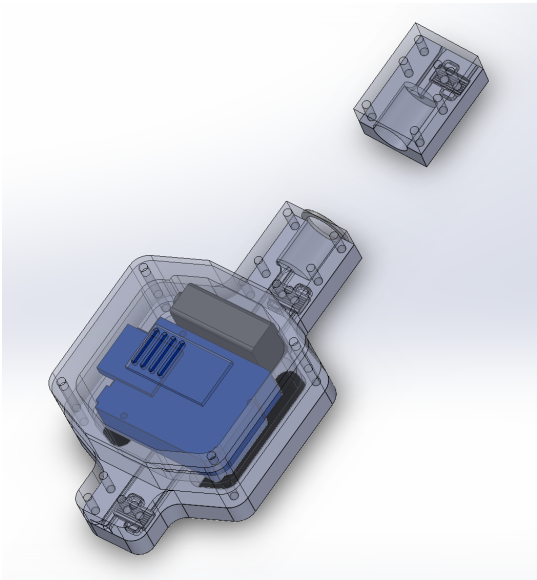

Figure 27: Sensor Package Complete

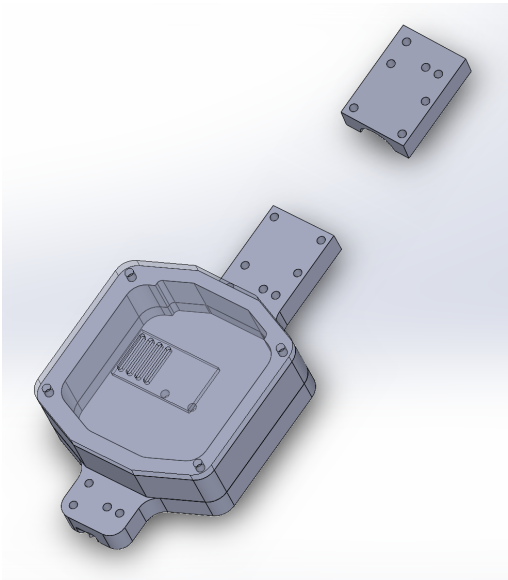

Figure 28: Sensor Package Cavity

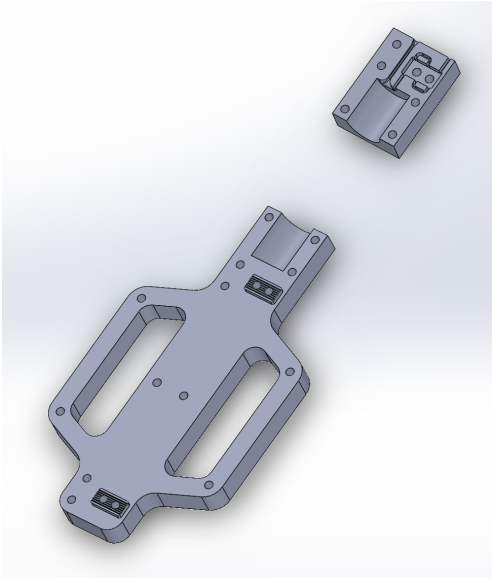

Figure 29: Sensor Package Top Clamp

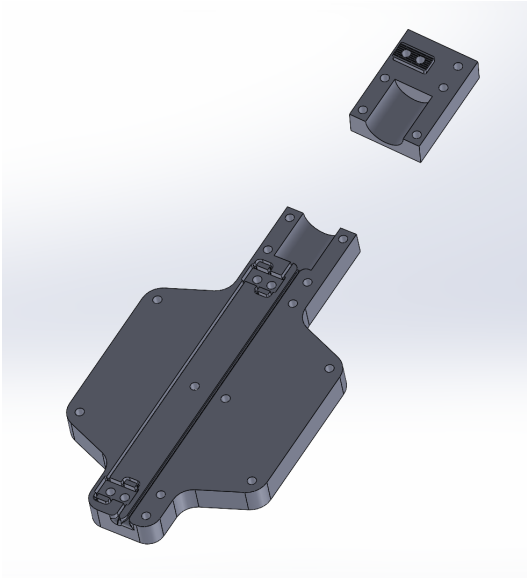

Figure 30: Sensor Package Bottom Clamp

This design utilizes 6-32 screws with nuts to clamp the pieces together. Additionally this design provides the axle housing for the pipe axle used by the particle sensor described in the next section. These components were 3D printed and

assembled together. The final component assembled can be seen in the next subsection discussion.

Subsystem 2b: Arduino Sensor Interface

For the Arduino sensor interface, we initially tested the use of three different candidate sensors: the MPL3115A2, the BME 280 and the LSM6DS3.

The MPL3115A2 is an altitude, pressure and temperature sensor that operates using an I2C interface. Our initial tests show that the temperature measurements with the sensor are accurate and sensitive. The altitude measurements on the other hand are supposed to be accurate to 30 centimeters but when the sensor is stationary, we are seeing about 40 centimeters of noise in both directions. This might be able to be fixed by averaging the data since when the sensor is moved vertically by two meters the average seems to move by 2 meters. Making sure the supply current is well regulated at 40 μA would be another way to make sure the sensor is operating properly.

The LSM6DS3 is a six-axis accelerometer and gyroscope which is a combination of a three-axis accelerometer and a three-axis gyroscope. The accelerometer uses gravity to measure the sensor's position relative to the earth's surface while the gyroscope uses angular velocity to measure the roll, pitch, and yaw of the sensor. It is able to detect freefall, withstand mechanical shock and operates using an I2C or SPI interface.

The BME 280 is a temperature, humidity, and pressure sensor. It is similar to the previous sensor, but it has the ability to measure humidity and it's able to operate using an I2C or an SPI interface. We used the I2C interface. This sensor offered an all in one package that met our needs for the data collection we wanted to accomplish.

Ultimately, we decided to use just the single BME 280 sensor as this both simplified our package and reduced the weight and power needs of the unit. Once coded, the data stream from this sensor to the Arduino unit was reliable and plausible.

Subsystem 2c: Arduino Sensor Interface - Datalogging

For data logging we used Adafruit's Data Logger Shield Rev B, which is designed for the Arduino uno boards we are using. This shield accommodates an SD interface to which we can record any number of files of incoming data. The interface is compatible with FAT16 or FAT32 file formats. This system also integrates a 3.3V voltage regulator to connect to the shield. While we intend to protect the SD card and data logging components from harsh weather conditions, the SD card should be capable of operation in temperatures as low as -25°C.

An added benefit of this shield is an on-board battery backed real-time clock. The real-time clock on this data-logger is the PCFF523 model. This we can record a time-stamp along with our collected meteorological data and can keep time without the main power by using a chip battery. With the shield and Arduino connected, we were able to activate the real time clock (RTC) function and record time stamps from the

on-board clock. These recorded times were also written to a text file on the Arduino. Figure 31 shows a fritz schematic for the BME280 and Arduino datalogger combo.

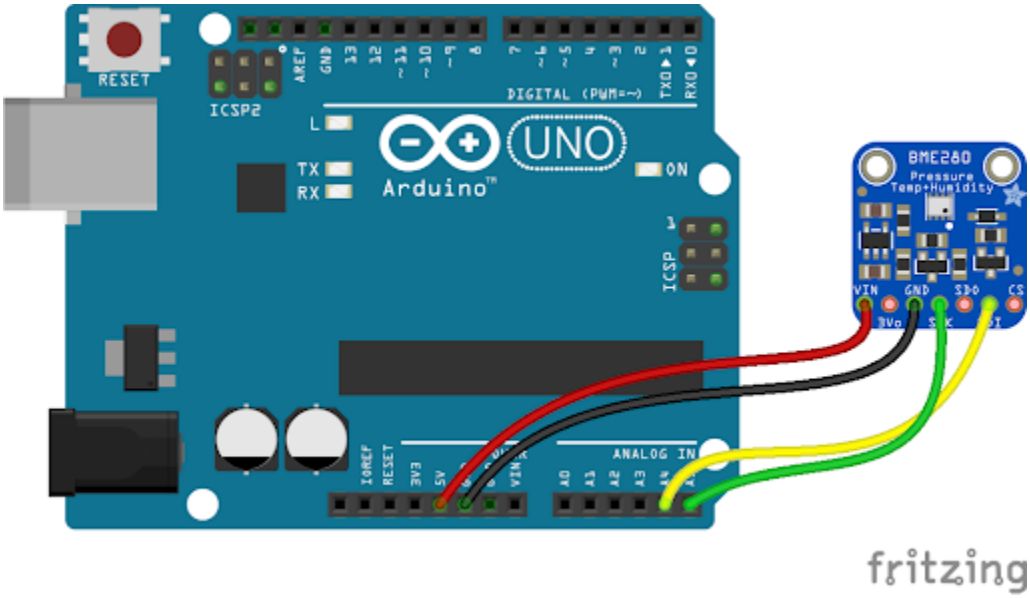

Figure 31: Arduino UNO with BME280 Fritz Schematic

The Arduino Data Logger Shield unit offers four analog data channels at 10-bit resolution. The data-logger communicates with the arduino using SPI which we connect to pins 10 and the ICSP 2x3 headers. Should additional data collection channels be required, additional Arduino uno boards or a different Arduino board such as the Leonardo or Mega could be used to expand this functionality. Similarly, if no additional data is needed, switching to an Arduino mini and datalogger could reduce the footprint and weight. Figure 32 below shows an early assembly of the data logging Arduino unit. Figure 33 shows the final version of the system soldered together and ready for use.

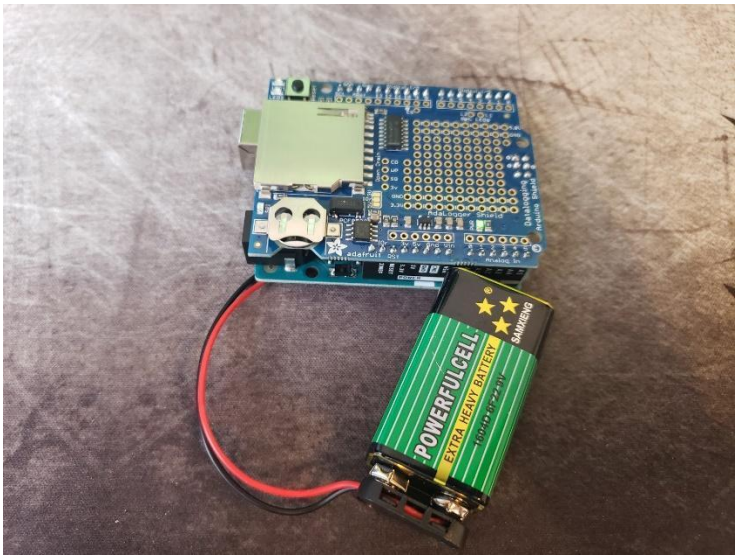

Figure 32: Arduino UNO with Datalogger Shield

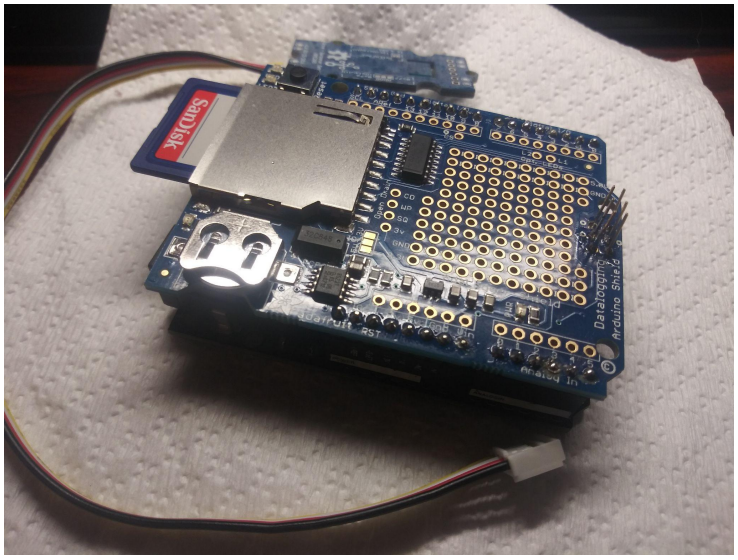

Figure 33: Final Data Logging System Package

With a fully assembled sensor package with data logging capabilities, test runs were conducted to verify code function, data logging success and also longevity. The system writes to a text file on the external SD card for later recovery and data analysis. An example of this data stream output is below in figure 34. An example of the raw data output file is shown below in figure 35. The code used to generate the data output file is shown in Appendix D.

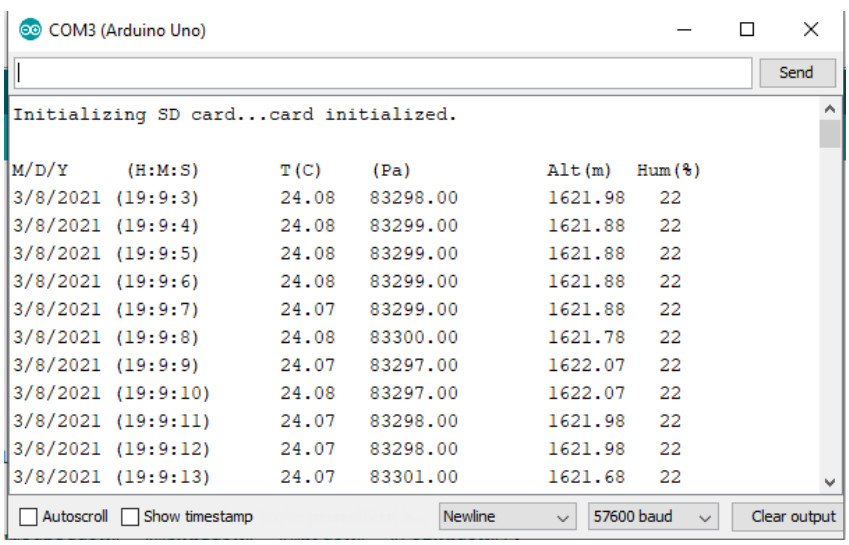

Figure 34: Arduino Data Stream Output

4/25/2021	(11:30:4)	24.20	61580.00	4007.50	99
4/25/2021	(11:30:5)	22.45	81539.00	1795.06	35
4/25/2021	(11:30:6)	22.52	81537.00	1795.26	35
4/25/2021	(11:30:7)	22.54	81540.00	1794.96	35
4/25/2021	(11:30:8)	22.56	81538.00	1795.16	35
4/25/2021	(11:30:9)	22.57	81539.00	1795.06	35
4/25/2021	(11:30:10)	22.58	81540.00	1794.96	35
4/25/2021	(11:30:11)	22.59	81541.00	1794.86	35
4/25/2021	(11:30:12)	22.60	81537.00	1795.26	35
4/25/2021	(11:30:13)	22.60	81537.00	1795.26	35
4/25/2021	(11:30:14)	22.61	81536.00	1795.36	35
4/25/2021	(11:30:15)	22.62	81538.00	1795.16	34
4/25/2021	(11:30:16)	22.61	81540.00	1794.96	34
4/25/2021	(11:30:17)	22.62	81538.00	1795.16	34
4/25/2021	(11:30:18)	22.62	81539.00	1795.06	34
4/25/2021	(11:30:19)	22.62	81536.00	1795.36	34
4/25/2021	(11:30:20)	22.62	81540.00	1794.96	34
4/25/2021	(11:30:21)	22.62	81538.00	1795.16	34
4/25/2021	(11:30:22)	22.63	81538.00	1795.16	35
4/25/2021	(11:30:23)	22.64	81538.00	1795.16	37
4/25/2021	(11:30:24)	22.66	81538.00	1795.16	38
4/25/2021	(11:30:26)	22.69	81540.00	1794.96	39

Figure 35: Data Output File Example

The final concern with this subsystem was how long it could record data. We used a 9 volt Duracell battery for the main power. The RTC chip was powered using a CR1220 3V lithium metal coin cell battery. The average run time in a room temperature room was 9 hours with the limiting factor being the 9 volt battery. The chip was not put to a test because its battery life was too long to run multiple tests without more data-logger units. Had we more units the Arduino sensor package to mangle, we would have liked to run riskier tests such as test runs in very hot and very cold temperatures, high and low humidity levels, and generally in sunny, rainy, and snowy weather conditions.

Subsystem 3: Particle Detection System

Purpose:

After some discussions with our stakeholders mid-year, the idea of developing a system to capture particles of blowing snow with some sort of camera system was proposed. After much discussion and ideation, a design was introduced, designed, prototyped and tested. The purpose of this subsystem is to capture live images of wind borne snow particles and process those captured images into usable data for analysis.

Subsystem 3a: Camera System

Multiple camera options were tested varying from action cameras like GoPros to various Raspberry Pi camera options. Ultimately one model of Raspberry Pi camera was selected for its high resolution, small size, and appropriate focal length. The camera selected uses a ¼” OV5647 sensor with an M12 adjustable 4mm focal length lens. During tests this camera was found to resolve snow size particles (0.05mm to

0.5mm in diameter) The adjustable lens allowed for focus to be adjusted to resolve particles clearly and at the desired backplane. To supplement this camera, an LED ring array was added to illuminate the imaging zone during image capture. Both the camera and the LED ring run off of a Raspberry Pi. The Raspberry Pi captures and stores the images to an external 32gb SD card. The entire system runs off of a 3.7V 1200mAh lithium ion battery pack. Figure 36 shows an early testing run of this camera system.

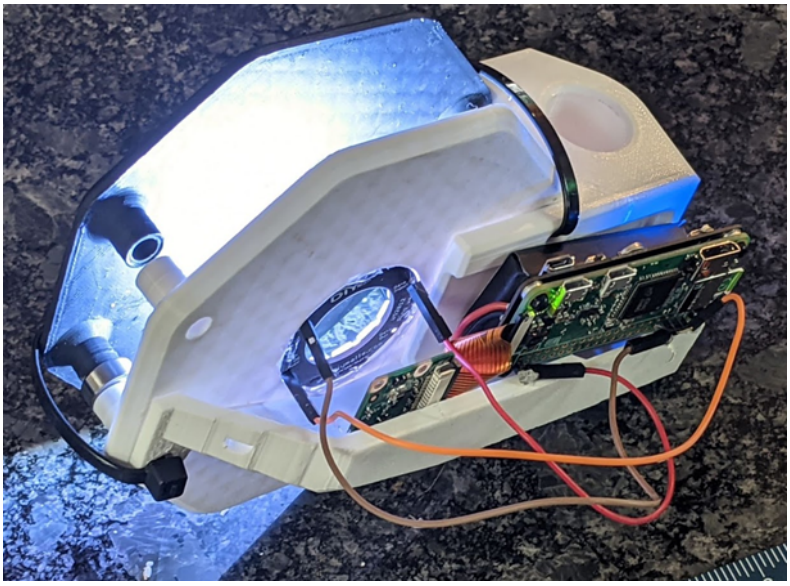

Figure 36: Early Camera Test

Subsystem 3b: Camera Housing

With the goal of imaging blowing snow particles, a mechanism for aligning the camera image perpendicular to wind direction was needed. To accomplish this, a weathervane / windsock style housing was developed to hold the camera and Raspberry Pi system. A two plate system that provides a flat black back plane for images was combined with a hub system that rides on a ¾" piece of pipe serves as the housing for this system. The camera imaging back plane was painted flat black with a known low reflectance Krylon flat black paint. A tail rod and fin completes the wind sock like design. The entire assembly was 3D printed and assembled with the Arduino sensor package housing from the last section. PTFE friction bearings were installed to aid in free spinning of the package. The entire assembly was modeled using Onshape. A 3d model is shown below in figure 37.

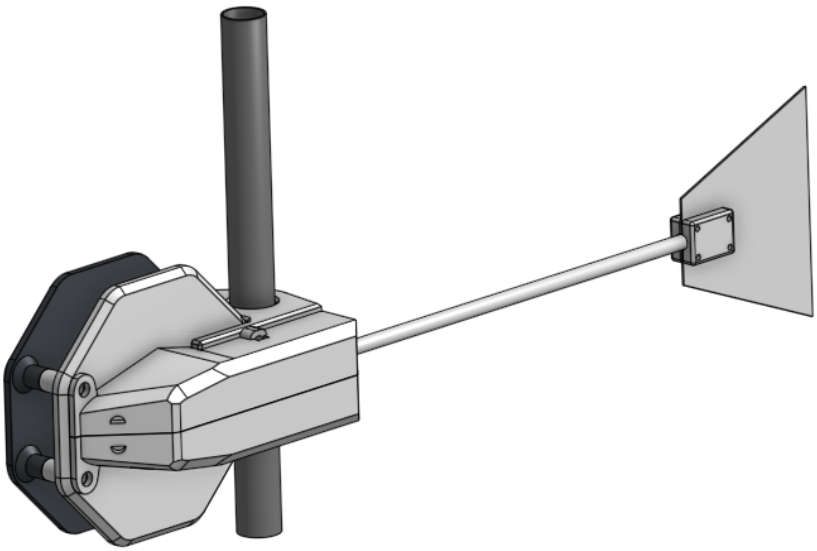

Figure 37: Camera System 3D Model

Once the camera particle sensor system housing was assembled, it was combined with the housing for the meteorological sensors into a single unit that attaches to the tether cord. A model of this system is shown below in figure 38. The final produced prototype is shown below in figure 39.

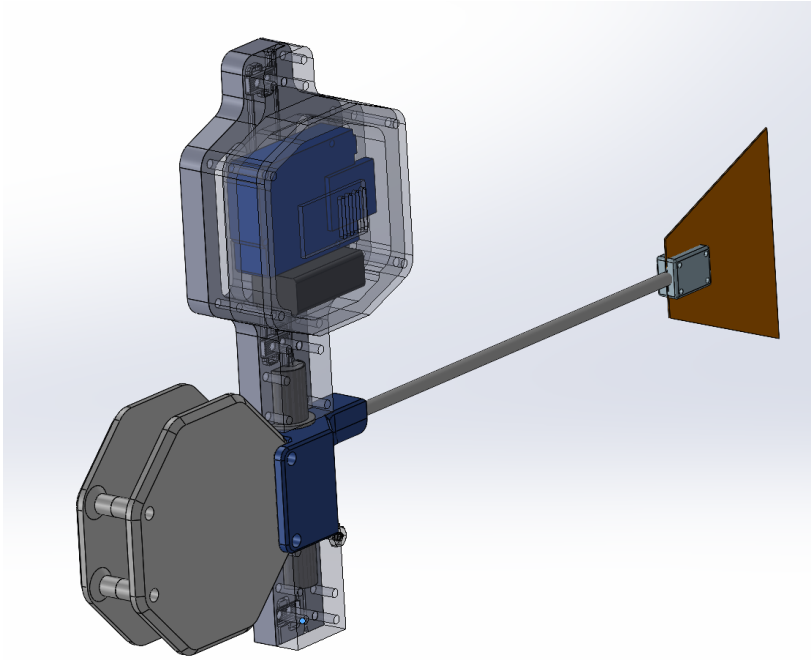

Figure 38: Complete Data Collection System

Figure 39: Complete Assembled Prototype Sensor System

Brief testing was completed with this assembled system to verify that the camera system rotates freely about the axle. Some rebalancing was required to ensure the proper operation of the mechanism, but once adjusted the system worked well.

Subsystem 3c: Image Analysis

While the Raspberry Pi system is capable of capturing images of snow that passes through the imaging chamber, the images on their own are not of much use without some further processing and analysis. While the Raspberry Pi could do some processing of images in real time, the unit simply isn't powerful enough to process the number and resolution of the images captured. Images captured are exported to an SD card and are processed on a computer post collection. Computer Vision image analysis processes the images and provides defined particle / non particle areas of images which can be used to analyse the composition of particles. Sequences of images can be used to determine particle velocity. Figures 40 through 42 show a raw image and the results of the image processing steps.

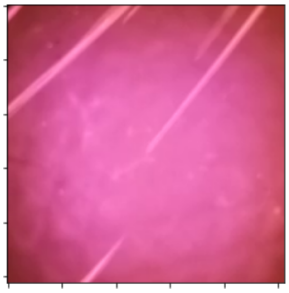

Figure 40: Image Pre Processing

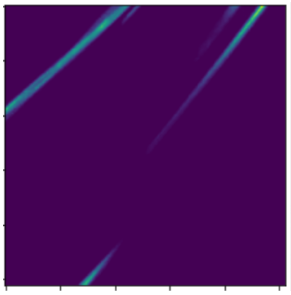

Figure 41: Squared Delta Filter Applied

Figure 42: Image Segmentation Applied

With additional work processing and modeling of real snow particles, we believe this system could prove useful in measuring what is normally a very difficult phenomenon to measure, blowing snow.

Overall, this subsystem works better than expected and is a key element of our final system. A few concerns we had with this system was the battery life and the post image processing. We believe that with some data analysis expertise and some more data collection in controlled environments, the output of this system can be tuned to correctly quantify blowing snow amounts and be valuable data to scientists who study snow behavior. The other concern, battery life, was determined to be less of a concern relative to the rest of the system. The 1200mAh battery provides about 90 minutes of run time with the LED illumination running. Compared to the battery life of the drone, several drone flight cycles could be run on a single charge of this system.

Integrated System:

Following the testing of the three major subsystems, combined tests were conducted. These tests concluded how well the systems would work when combined. Two integrated subsystems were tested before combining those two into a single final complete system. A flow chart of how these systems fit together is shown below in figure 43.

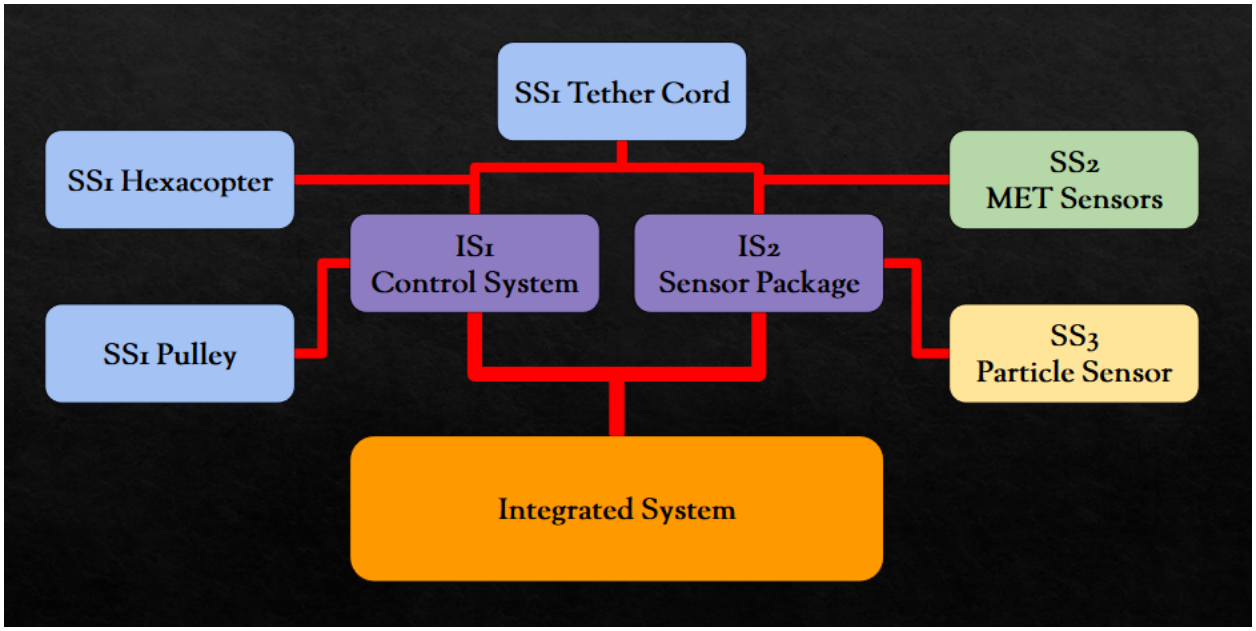

Figure 43: Subsystem Flow Chart

Integrated Subsystem 1: Control System

While the drone system qualifies as a subsystem on its own, its ultimate purpose is to carry and field the tether cord system into the sky. This is the first integrated system tested. The tether cord with reel system was connected to the drone system via the pulley. Figure 44 below shows these systems combined and ready for testing.

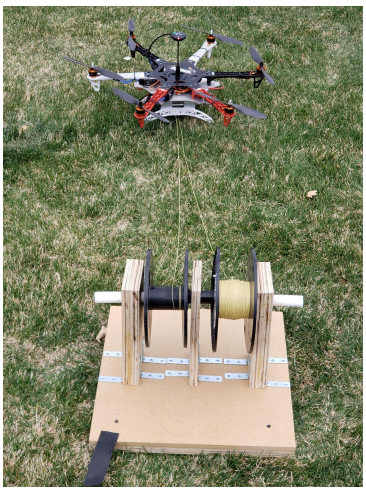

Figure 44: Drone System With Tether System Attached

Test flights were conducted and with no payload found to be successful. The drone was flown to various test altitudes with the tether cord attached. Each test proved successful even in higher wind environments. As a final test of this integrated system, a flag was taped to the tether cord and raised up and down the cord to simulate the future payload moving up and down the cord. This test also proved the concept of using the tether cable as a flag pole like system with the drone system as the anchor point. A screenshot of a video of this test is shown below in figure 45.

Figure 45: Test Flight with Tether Cord

Overall, the drone with a tether cord system works well. The chief concerns with this system were battery life and concerns over the tether cord becoming entangled. The kevlar cord proved surprisingly resistant to tangling and was easy to control with the manual reels on the ground.

Integrated System 2: Sensor Package

As mentioned in a previous section, the particle sensor system and meteorological sensor system by design must be integrated together. While the assembly proved effective at fielding the particle sensor unit, the system still required testing while connected to the tether cord. To accomplish this testing, the tether cord system was removed from the drone system and attached to a spare pulley affixed at the top of a staircase. The combined sensor system was then attached to the tether

cord. The system was manually raised up and down the tether cable several times and proved to move smoothly and easily. Additionally, during this testing there was significant wind which also allowed a demonstration of the particle sensor aligning as designed. Overall this system works well and this testing shows that even if a drone based anchor system is not always viable, this system can be used in other arrangements. An image of this testing is shown below in figure 46.

Figure 46: Sensor System Tether Testing

Complete Integrated System Test

Having proven the viability of each subsystem and of the larger integrated subsystems, a final test that combines the sensor system, tether cord and drone system was all that remained in the testing regimen for this project. At this point, the sensor package system was already assembled with the tether cord. That system was attached to the pulley system of the drone system. Test flights were attempted with this final integrated system but unfortunately the drone failed to lift the sensor package more than a few inches off the ground. After several tries, we concluded that the drone did not have enough thrust to lift the 20g payload of the sensor package while also lifting its own increased mass due to the modifications made to the drone. While an unfortunate final outcome to the project, we do believe that with a more powerful drone the system would work. For an inexpensive hobby quality drone system, the results are still promising. Figure 47 shows the failed final flight test of the complete integrated system.

Figure 47: Final System Test

Final Conclusions

Summary

While the final testing ended in a failure (the system met one of our failure modes) we do still believe the system to be a viable path to meeting the goal of blowing snow measurement. Following the failure of the complete system, we assessed the results and attempted to determine the cause of the failure.

Failure Analysis

Prior to construction of prototypes, some rudimentary static analysis was conducted to determine the viability of the system. Estimated weights of each system as well as the rated thrust for the drone motors were used to estimate whether or not the system would be capable of lifting the desired payload. A summary of these computations is shown below the load analysis section. The anticipated loading of the system was expected to require approximately 60% of the drone motors' maximum thrust. In drone systems like this, it is ideal to operate motors around 50% of their maximum to leave enough thrust headroom to allow for maneuvers and acceleration. Under these assumptions the system was expected to function.

Analysing components post failure, it was found that the entire drone plus payload system weighed about 30% more than expected. With these higher weights, the system would require closer to 90% of the available thrust which doesn't leave enough extra power to enable acceleration or the ability to react to environmental conditions. While the actual thrust of the drone motors were not measured, these motors are notorious for not meeting full manufacturers specifications and many drone operators recommend testing their drone motors prior to use to determine the real thrust output. Variations in manufacturing quality of the motors and controllers could have resulted in a system not capable of expected thrust and thus the failure of the end system.

Future Considerations

Following the successes and failures of this project, we took some time to consider future directions for this project. Some are improvement ideas and others are alternate implementation ideas.

- Upgraded Drone System
  By upgrading the drone system to a more powerful unit, we believe the sensor package system would be able to be fielded in the desired manner. At the lower budget limitations of this project, the $300.00 hobby quality drone was just not sufficient for this application

- Alternate Mounting System
  If using a drone to field the system proves untenable, some alternate methods could be used to field the sensor package. A fixed pole much like a flag pole could be an option and could be added to existing research

stations in the field. Another alternative would be to utilize a system of tension cables to suspend this system between mountain peaks.

- Additional System Integration
  This system utilized three separate electronic systems with three separate power sources. Ideally a system like this would see a unification of these systems with a shared single power source.

- Expanded System Functions
  The data logging system was underutilized. Additionally sensors could be added to the system to expand its research capabilities.

- Automated Reel System
  One of the original desired components of this system was to have an automated motor system to control the tether reels. Time and budget cut this from the final project but we do believe an automated reel system would significantly improve the performance of the system.

Load Analysis

Utilizing a drone system requires careful consideration of payload capacities. Using the specifications of the drone motors, densities and sizes of designed components as well as specifications of purchased components, a load analysis was considered prior to construction. Original free body diagrams are shown in appendix E. Figure 48 below has the theoretical loading conclusions. A goal of 50% to 60% of maximum motor thrust was desired.

A	Drone (Base)	-15.69	[N]
B	Drone (Add ons)	-9.74	[N]
C	Sensor Cart	-5.56	[N]
D	Cable Tension	-5	[N]
E	Battery	-3.92	[N]
T	Drone Thrust (max)	70.62	[N]
	Net Available Thrust	30.71	[N]

Figure 48: Load Analysis

Power Analysis

In addition to payload capacities, the power needs of the different systems had to be considered to ensure that the selected power sources would be sufficient to operate the systems long enough for the desired outcomes. Three distinct systems were used in this system so each was analysed based on their anticipated power usage and their battery sizing. Additionally, actual runtime was tested for each system. A summary of this analysis is shown below in figure 49.

Component Power Consumption Analysis

Subsystem	Power Source	Capacity [mAh]	Draw [mA]	Estimated Runtime [min]	Actual Runtime [min]
Datalogger	9V Alkaline	500	100	300	540
Particle Sensor	3.7V Li Ion	1200	800	90	75
Drone	11.1V Li Polymer	4400	30000	8.8	8

Figure 49: Power Analysis

Patent Search

While many components of this designed system are off the shelf components and of themselves would not be eligible for patents, one part of our system did show some promise of possibly being unique enough to consider for a patent. The particle sensor system in a weathervane / wind sock system seemed unique enough and a cursory investigation didn't immediately reveal a competing product on the market. As a result, we conducted a patent search for similar devices. The results of this search revealed that many systems utilize small camera imaging systems like this to measure particles however none that we found also had the component for measuring wind borne particles in this same manner. At the conclusion of the project, we intend to reach out to the CU Denver legal department and complete an invention disclosure form to at least investigate the possibility of pursuing a patent.

Project Budget

The primary source of funding for this project was through the respective engineering departments for each student on the team. Mechanical engineering students receive $300.00 each from the university for the year and the team consists of three ME students, providing the team with $900.00 for the year. Electrical engineering students receive $100.00 each from the university for each semester and the team consists of four EE students, providing the team with $800.00 for the year. Total

available funding totaled $1700.00 for the duration of the project. Additionally, our sponsors at NCAR provided us with the Pixhawk 4 control system which would have otherwise not been affordable within our budget constraints. Following purchases of components, raw materials, spare parts and consumables, a majority of the budget was spent. Remaining funds nearer to the end of the semester were used to purchase additional drone batteries to extend available testing time. In the end, the project spent a total of $1670.76 leaving $29.24 remaining. An exhaustive budget expenditure list is available in appendix B.

Acknowledgements

We would like to express a special thanks of gratitude to our professors, Daniel Jensen and Jeff Selman, who gave us the opportunity to work on this project and has helped guide us through the design process. Our gratitude goes out to Jac Corless as well for assisting with the machining of some elements. We would also like to thank our sponsors at the National Center for Atmospheric Research, including Dr. David Yates, Ethan Gutmann, and Scott Landolt for their feedback and support.

Appendix A: Project Planning GANTT Chart

Low Cost Snowpack Measurement (Team 2)

University of Colorado Denver
Team Lead: Byron McDanold

Project Start: Tue, 1/19/2021
Display Week: 1

TASK	ASSIGNED TO	PROGRESS	START	END
Integrated System Prototype				
Hexacopter Drone Operation		100%	1/21/21	4/9/21
Sensor Package		100%	1/21/21	4/14/21
Sensor Cart		100%	1/21/21	4/14/21
System Integration		100%	1/21/21	4/18/21
Hexacopter Drone Operation				
Basic Operation	John / Lee	100%	1/21/21	2/20/21
PixHawk 4 Integration	John / Lee	100%	1/23/21	2/20/21
Tethered Operation	John / Lee	100%	2/20/21	4/11/21
Pulley System Design	Byron, Rachael, Tolu	100%	2/20/21	3/1/21
Pulley System Fabrication	Byron, Rachael, Tolu	100%	3/1/21	4/9/21
Assembled Operation	John / Lee	100%	3/20/21	4/2/21
Final Testing	John / Lee	100%	4/2/21	4/9/21
Sensor Package				
Datalogger Operation	Rafael	100%	1/21/21	2/13/21
Temperature, RH, Barometer	Rafael / Lee	100%	1/21/21	2/13/21
Accelerometer, Altitude, Gyro	Rafael / Lee	100%	1/21/21	2/13/21
Visual Particle Detection	David, Lee, Rafael	100%	2/11/21	4/18/21
Combine Datalogger with Sensors	Rafael, Lee	100%	2/13/21	2/20/21
Power Use	Rafael	100%	2/20/21	2/22/21
Camera Test 1	John	100%	2/14/21	3/1/21
Camera Test 2	David	100%	2/14/21	3/21/21
Computer Learning Analysis	David, Lee, Rafael	100%	3/21/21	4/18/21
Test Total Datalogging System	Rafael	100%	2/22/21	3/20/21
Sensor Cart				
Physical Design 1	Byron / Rachael	100%	1/21/21	1/25/21
Sensor + Arduino Mounting	Byron / Rachael / Tolu	100%	2/22/21	4/14/21
Particle Sensor System Design	David	100%	3/21/21	4/2/21
Particle Sensor System Fabrication	David	100%	4/2/21	4/14/21
Physical Design 2	Byron / Rachael / Tolu	100%	1/21/21	4/9/21
Fabrication	Byron, David	100%	4/9/21	4/14/21

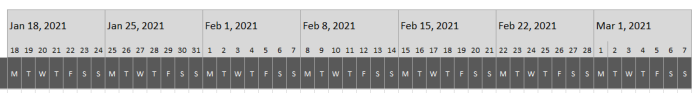

Low Cost Snowpack Measurement (Team 2)

University of Colorado Denver
Team Lead: Byron McDanold

Project Start: Tue, 1/19/2021
Display Week: 1

TASK	ASSIGNED TO	PROGRESS	START	END
Integrated System Prototype				
Hexacopter Drone Operation		100%	1/21/21	4/9/21
Sensor Package		100%	1/21/21	4/14/21
Sensor Cart		100%	1/21/21	4/14/21
System Integration		100%	1/21/21	4/18/21
Hexacopter Drone Operation				
Basic Operation	John / Lee	100%	1/21/21	2/20/21
PixHawk 4 Integration	John / Lee	100%	1/23/21	2/20/21
Tethered Operation	John / Lee	100%	2/20/21	4/11/21
Pulley System Design	Byron, Rachael, Tolu	100%	2/20/21	3/1/21
Pulley System Fabrication	Byron, Rachael, Tolu	100%	3/1/21	4/9/21
Assembled Operation	John / Lee	100%	3/20/21	4/2/21
Final Testing	John / Lee	100%	4/2/21	4/9/21
Sensor Package				
Datalogger Operation	Rafael	100%	1/21/21	2/13/21
Temperature, RH, Barometer	Rafael / Lee	100%	1/21/21	2/13/21
Accelerometer, Altitude, Gyro	Rafael / Lee	100%	1/21/21	2/13/21
Visual Particle Detection	David, Lee, Rafael	100%	2/11/21	4/18/21
Combine Datalogger with Sensors	Rafael, Lee	100%	2/13/21	2/20/21
Power Use	Rafael	100%	2/20/21	2/22/21
Camera Test 1	John	100%	2/14/21	3/1/21
Camera Test 2	David	100%	2/14/21	3/21/21
Computer Learning Analysis	David, Lee, Rafael	100%	3/21/21	4/18/21
Test Total Datalogging System	Rafael	100%	2/22/21	3/20/21
Sensor Cart				
Physical Design 1	Byron / Rachael	100%	1/21/21	1/25/21
Sensor + Arduino Mounting	Byron / Rachael / Tolu	100%	2/22/21	4/14/21
Particle Sensor System Design	David	100%	3/21/21	4/2/21
Particle Sensor System Fabrication	David	100%	4/2/21	4/14/21
Physical Design 2	Byron / Rachael / Tolu	100%	1/21/21	4/9/21
Fabrication	Byron, David	100%	4/9/21	4/14/21

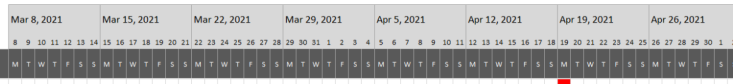

Appendix B: Budget and BOM

Fund Source	Component	SubSystem	Quantity	Unit Cost	Shipping	Total	Actual Cost
ME	Kevlar Cord 1.0mm 100lb 500'	Sensor Cart	1	$15.95		$15.95	6.96
ME	DC motor with gearbox	Sensor Cart	2	$36.00	$16.39	$88.39	$88.39
ME	DC motor controller	Sensor Cart	2	$30.00		$60.00	$60.00
ME	Pulley 3/64" Rope w/ Bearing	Sensor Cart	2	$10.65		$21.30	$21.30
ME	Altitude/Pressure Sensor	Sensor Cart	2	$14.99		$29.98	$29.98
ME	Datalogger Shield	Sensor Cart	2	$14.99		$29.98	$29.98
ME	Arduino Uno	Sensor Cart	4	$22.00		$88.00	$79.59
ME	Battery for Logger	Sensor Cart	1	$5.99		$5.99	5.99
ME	3d printer filement	Sensor Cart	1	$22.99		$22.99	$22.99
ME	3/16 Shoulder Bolt	Sensor Cart	2	$2.30		$4.60	$4.60
ME	Radio Downlink kit	Glider Test 1	1	$40.00		$40.00	$46.95
ME	Raspberry Pi zero	Particle Sensor	2	$27.99		$53.09	$53.09
ME	Pi Camera 1	Particle Sensor	2	$18.99		$37.98	$37.98
ME	Pi Camera 2	Particle Sensor	1	$29.99		$29.99	$29.99
ME	Pi Camera LED Ring	Particle Sensor	2	$6.50		$13.00	$13.00
ME	Pi Battery Kit 1	Particle Sensor	1	$39.99		$39.99	$39.99
ME	Pi Battery Kit 2	Particle Sensor	1	$14.99		$14.99	$14.99
ME	Suspension Mounts	Pulley Mount	4	$54.60	$9.79	$228.19	$228.19
ME	Memory Card 32gb	Particle Sensor	2	$7.49		$14.98	$14.98
ME	1" Aluminum Bar	Pulley Mount	1	4.92		$4.92	$4.92
ME	U Channel	Pulley Mount	1	13.76		$13.76	$13.76
ME	Aluminum Plate	Pulley Mount	1	7.11		$7.11	$7.11
ME	Shoulder Bolt 1/4	Pulley Mount	2	2.71		$5.42	$5.42
ME	Thrust Bearing	Pulley Mount	1	3.02		$3.02	$3.02
ME	Thrust Bearing Washer	Pulley Mount	2	1.23		$2.46	$2.46
ME	Friction Thrust Bearing	Particle Sensor	2	3.72		$7.44	$7.44
ME	M3 Washer	Pulley Mount	1	1.77		$1.77	$1.77
ME	M3 Nuts	Pulley Mount	1	3.57		$3.57	$3.57
ME	#8 Washer	Pulley Mount	1	3.77		$3.77	$3.77
ME	1/4 Washer	Pulley Mount	1	5.23		$5.23	$5.23
ME	10-32 Screws	Pulley Mount	1	6.38		$6.38	$6.38
						$904.24	$893.79
EE	Hexacopter Drone	Drone Test 1	1	$299.02	$28.00	$327.02	$327.02
EE	Temp, Humidity, barometer Sensor	Drone Test 1	1	$23.50	$4.00	$27.50	$27.50
EE	Accelormeter and Gyroscope sensor	Drone Test 1	1	$11.90	$1.50	$13.40	$13.40
EE	Arduino Uno	Drone Test 1	1	$23.00	$1.44	$24.44	$24.44
EE	Camera	Drone Test 1	1	$199.00	$0.00	$199.00	$199.00
EE	SD Cards	Drone Test 1	2	$23.84	$0.00	$47.68	$47.68
EE	Camera Case/mount	Drone Test 1	1	$12.98	$0.00	$12.98	$12.98
EE	Landing gear	Drone Test 1	1	$6.99	$0.00	$6.99	$6.99
EE	Extra Drone Batteries	Drone Test 1	2	$51.99	$0.00	$103.98	$103.98
EE	Extra D batteries	Drone Test 1	1	$13.98	$0.00	$13.98	$13.98
						$659.01	$776.97
NCAR	Pixhawk4	Glider Test 1	1	$250.00		$0.00	$0.00

	Fall	Spring	Spent	Remaining
ME Budget	$900.00	$0.00	$893.79	$6.21
EE Budget	$400.00	$400.00	$776.97	$23.03
				$29.24

Appendix C: UAS Certification and Safety Plan

Small UAS Certificate of Registration

Name: Jpelepchan

Manufacturer: Mingchuan

Model: F05114-BA F550

Serial Number: N/A

Certificate Number: FA3LF9AXTP

Issued: 02/16/2021 **Expires:** 02/16/2024

For U.S. citizens, permanent residents, and certain non-citizen U.S. corporations, this document constitutes a Certificate of Registration. For all others, this document represents a recognition of ownership.

Operators of unmanned aircraft must ensure they comply with the appropriate safety authority from the FAA and economic authority from the DOT. To operate as a recreational flyer, a person must meet all of the statutory conditions of the exception for limited recreational operations of unmanned aircraft (49 U.S.C. 44809). Persons who do not meet any of the statutory conditions may not operate under the statutory exception for limited recreational operations of unmanned aircraft and would need to operate the unmanned aircraft under part 107 or any other applicable FAA authority.

This Small UAS Certificate of Registration is not an authorization to conduct flight operations with an unmanned aircraft. Operations must be conducted in accordance with the applicable FAA requirements. The operator of the aircraft is responsible for knowing and understanding what those requirements are. For more information on flying for non-model purposes, please visit the FAA website at www.faa.gov/uas.

Senior Project – Drone Safety Plan

I. Overview

Unmanned aerial vehicles present unique hazards to their operators as well as the public in the vicinity of their operation. Adherence to safety protocols will ensure that no injury to person or damage to property occurs

II. Safety Procedures

a. Operator Responsibilities

i. Three people should be present during any operation of the UAS

1. UAS Operator
Responsible for piloting the drone. Handles all matters that require physical contact with the UAS system. Handles the controller whether remote or computer based

2. UAS Spotter
Responsible for watching the operation of the UAS system. Should inform the operator if any failures or safety concerns are witnessed

3. Safety Monitor
Responsible for observing the area around the drone operation site. Informs any members of the public in the vicinity of the UAS operation of potential hazards and directs them away from the area of operation

b. UAS System Safety Concerns

i. PPE Required
Safety glasses shall be worn by all persons within the operating range of the UAS system. Rotor failure can result in flying debris. Wash from rotors can also create airborne debris.

ii. Vehicle Rotors – Ensure that drone is powered off and that the main battery is switched off or disconnected before handling the drone. Inspect rotors for damage and correct installation prior to connecting power to the vehicle.

iii. Batteries – Lithium batteries must be handled with care. Inspect batteries prior to use for damage. Do not use damaged or faulty batteries. Dispose of expended batteries in accordance with local waste management procedures

iv. Tether Cables
Be aware of tether cables between the ground and UAS system. Take caution to not become entangled during operation

c. First Aid, Emergencies and Damage

i. In the event of an injury to a student or a member of the public, dial 911 and stay with the victim until help arrives. Do not administer first aid without the consent of the injured party.

ii. Report any injuries or property damage to the University (Professor Jensen)

III. Signatures
Sign below stating that you acknowledge these safety instructions and agree to adhere to them when operating UAS systems.

Name	Date	Responsibility

Appendix D: Arduino Datalogger Code

```
// Humidty Temp and Datalogger Combo Code

#include <SPI.h>
#include <SD.h>
#include "RTClib.h"
#include <Wire.h>
#include "Seeed_BME280.h"

BME280 bme280;

const int chipSelect = 10; // 4 for new datalogger, 10 for old ver

RTC_PCF8523 rtc;
char  daysOfTheWeek[7][12]  =  {"Sunday",  "Monday",  "Tuesday",  "Wednesday",
"Thursday", "Friday", "Saturday"};


void setup() {
  // put your setup code here, to run once:
  Serial.begin(57600);
  while (!Serial) {
    ; // wait for serial port to connect. Needed for native USB port only
  }

//*************************************************************************
************
// INITIALZING CARD AND DATALOGGER
  Serial.print("Initializing SD card...");

  // see if the card is present and can be initialized:
  if (!SD.begin(chipSelect)) {
    Serial.println("Card failed, or not present");
    // don't do anything more:
    while (1);
  }
  Serial.println("card initialized.\n");

//*************************************************************************
*************


//*************************************************************************
*************
// INITIALIZING REAL-TIME CLOCK (RTC)

  if (! rtc.begin()) {
    Serial.println("Couldn't find RTC");
    Serial.flush();
    abort();
```

```
  }

   rtc.adjust(DateTime(F(__DATE__), F(__TIME__))); // <--comment out for 2nd
upload

  if (! rtc.initialized() || rtc.lostPower()) {
    Serial.println("RTC is NOT initialized, let's set the time!");
    // When time needs to be set on a new device, or after a power loss, the
      // following line sets the RTC to the date & time this sketch was
compiled
    rtc.adjust(DateTime(F(__DATE__), F(__TIME__)));
     // This line sets the RTC with an explicit date & time, for example to
set
    // January 21, 2014 at 3am you would call:
    // rtc.adjust(DateTime(2021, 4, 25, 10, 5, 5));
    //
      // Note: allow 2 seconds after inserting battery or applying external
power
    // without battery before calling adjust(). This gives the PCF8523's
      // crystal oscillator time to stabilize. If you call adjust() very
quickly
    // after the RTC is powered, lostPower() may still return true.
  }
  rtc.start();
//*************************************************************************
*************


  if(!bme280.init()){
    Serial.println("Device error!");
  }
  Serial.println("M/D/Y\t  (H:M:S)\tT(C)\t(Pa)\t\tAlt(m)\tHum(%)");


}

void loop() {

  DateTime now = rtc.now();


    // make a string for assembling the data to log:
  String dataString = "";

  float pressure = bme280.getPressure();
  // append read data to the string:
  dataString += String(now.month(), DEC);
  dataString += ('/');
  dataString += String(now.day(), DEC);
  dataString += ('/');
  dataString += String(now.year(), DEC);
```

```
  dataString += ' ';
  dataString += ('(');
  dataString += String(now.hour(), DEC);
  dataString += (':');
  dataString += String(now.minute(), DEC);
  dataString += (':');
  dataString += String(now.second(), DEC);
  dataString += ")\t";
  dataString += String(bme280.getTemperature());
  dataString += "\t";
  dataString += String(pressure);
  dataString += "\t";
  dataString += String(bme280.calcAltitude(pressure));
  dataString += "\t  ";
  dataString += String(bme280.getHumidity());


  // open the file. note that only one file can be open at a time,
  // so you have to close this one before opening another.
  File dataFile = SD.open("datalogX.txt", FILE_WRITE);

  // if the file is available, write to it:
  if (dataFile) {
    dataFile.println(dataString);
    dataFile.close();
    // print to the serial port too:
    Serial.println(dataString);
  }
  // if the file isn't open, pop up an error:
  else {
    Serial.println("error opening datalog.txt");
  }


  delay(1000);
}
```

Appendix E: Free Body Diagrams

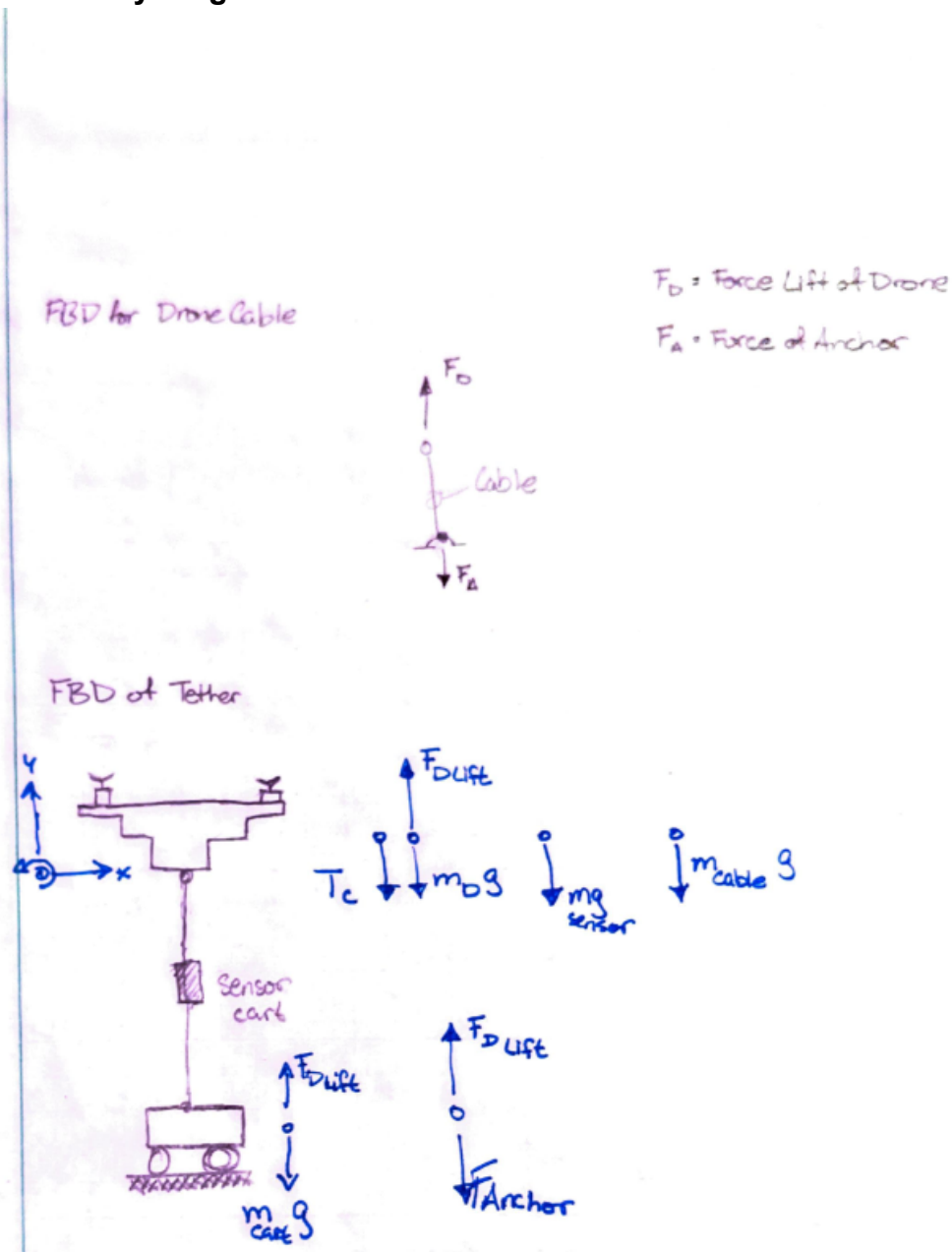

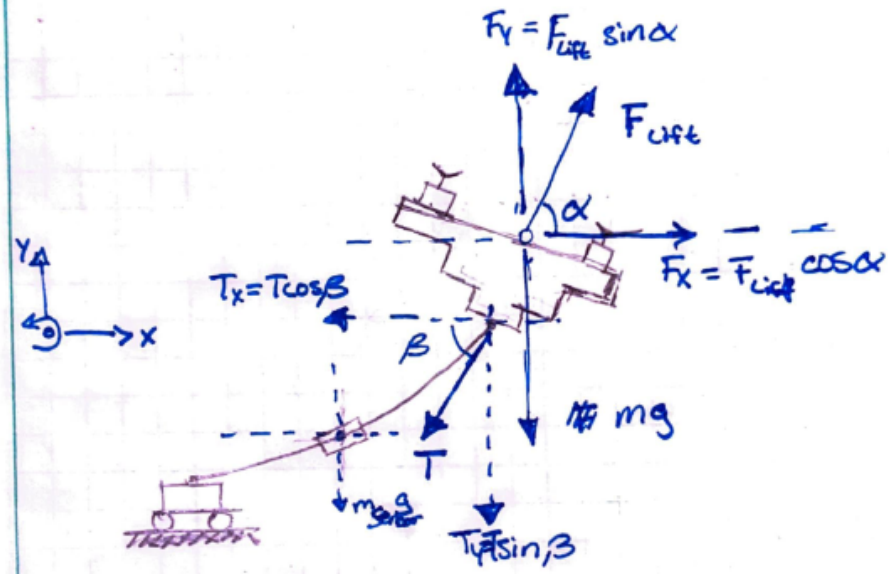
$F_Y = F_{lift} \sin\alpha$
F_{lift}
α
$F_X = F_{lift} \cos\alpha$
Y
X
$T_x = T\cos\beta$
β
mg
T
$T_y = T\sin\beta$

Appendix F: Contact Information

Name	Area of Study	Phone Number	Email
Rachael Arnold	Mechanical Engineering	(970) 373-8084	rachael.l.arnold2@gmail.com
Byron McDanold	Mechanical Engineering	(865) 207-1996	bmcdanold@comcast.net
John Pelepchan	Electrical Engineering	(720) 335-1128	Jpelepchan@gmail.com
Lee Evans	Electrical Engineering	(720) 261-9712	thomas.l.evans@ucdenver.edu
Tolu Odeyemi	Mechanical Engineering	(720) 568-0006	tolulope.odeyemi@ucdenver.edu
David Gedney	Electrical Engineering	(720) 534-1271	davidmgedney@gmail.com
Rafael Hernandez	Electrical Engineering	<redacted>	rafael.hernandez@ucdenver.edu